HG
Air Circuit Breakers

Overview and Characteristics		4
Technical Data	External Structure	6
	Internal Structure	7
	Connection Method	8
	Accessories	10
Model Selection Table		12
Accessories	Protection Trip Relay (OCR)	17
	Accessories	53
Dimensions		100
Circuit Diagram		124
Order Code		126
Installation and Environment		133
Maintenance Inspection List		144
Acquired Standards		147

ACB

HG Series

Air Circuit Breakers

Maximized customer's range of selection and level of satisfaction with model dualization and compact size.

Characteristics

Multi

Bus bar terminal can be changed to horizontal/vertical

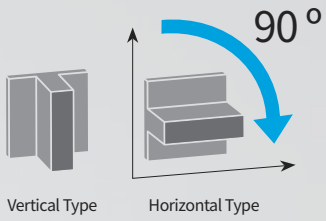

Retrofit

Customized Retrofit ACB can be Provided

New products can be developed to be compatible/installed according to the distance of cradle phase/pole/land and terminal size of the ACB that has been installed previously

Certifications

DEKRA

Maximum Breaking Capacity

150 kA (At 500 V, HGN D Frame)

Type per Rating

2 Frames, HGS 1,600/3,200 A

4 Frames, HGN 2,000/4,000/5,000/6,300 A

Rated Impulse Withstand Voltage (Uimp) : 12 kV

100 % N Phase Current Flow Capacity for all Types

A Frame [85 kA]

630 ~ 1,600 A (HGS) / 630 ~ 2,000 A (HGN)

B Frame [100 kA]

2,000 ~ 3,200 A (HGS) / 630 ~ 4,000 A (HGN)

C Frame [100 kA]

3,200 ~ 5,000 A (HGN)

D Frame [150 kA]

4,000 ~ 6,300 A (HGN)

Overview and Characteristics

Air Circuit Breaker (ACB)

Capable of Responding to Various Customer Applications

HG Series air circuit breaker is equipped with high breaking capacity and highly functional OCR, making various customer applications on industrial building, computer center, device industries and others possible. With all models designed with 100 % n phase current flow capacity, the equipment is safely protected against abnormal phenomenon such as harmonics and others.

Bus Bar Terminal can be Changed to Horizontal/Vertical

Connection method can be changed flexibly according to the customer's panel structure

- HGS/HGN A frame 630 ~ 1,600 A
- HGS/HGN B frame 630 ~ 3,200 A

Equipped with Various Accessories and Highly Functional Protection Trip Relay (OCR)

Over Current Relay (Trip Relay)

Apart from the basic protection functions, OCR has reinforced power monitoring functions such as temperature monitoring, fault recording and storage etc., enabling stable power supply.

N Type

- Overcurrent Protection (L/S/I/G)
- World's First NFC Function Applied
- Fault Recording (10) and Waveform (4 Cycles, Check Via Communication) can be Transmitted to Mobile Phone App

A Type

- Overcurrent Protection (L/S/I/G)
- Self Power
- Individual Continuous Power Contact
- Fault Recording (256) and Waveform (4 Cycles, Check Via Communication)
- Communication (MODBUS), External Grounding CT/Earth Leakage ZCT can be used

P Type

- Overcurrent Protection (L/S/I/G)
- External Power
- Individual Continuous Power Contact
- Fault Recording (256) and Waveform (4 Cycles, Check Via Communication)
- Over-Voltage/Under-Voltage, Power, Power Factor, Energy Display

H Type

- L/S/I/G Functions
- External Power
- Individual Continuous Power Contact
- Fault Recording (256) and Waveform (4 Cycles, Check Via Communication)
- L/S/I/G Minute Current Adjustment
- Voltage/Current Harmonics (1 st ~ 63 th) Analysis
- View 3 Phase Waveform

Convenient Maintenance by Attaching Draw-In/Out Device to the Body

Customized Retrofit ACB

New products can be developed to be compatible/installed according to the distance of cradle phase/pole/land and terminal size of the ACB that has been installed previously

- Economic : No need for busbar and external box replacement, minimum construction period, uninterruptable replacement in case of body retrofit
- Stability : Lifespan can be extended through the latest relay performance and by providing breaking performance of high breaking product
- Compatibility : Stable usage through control terminal bar, bus bar structure and plug-in compatible devices
- Technical Support : Customer satisfaction through inspection of various accessories of old panels

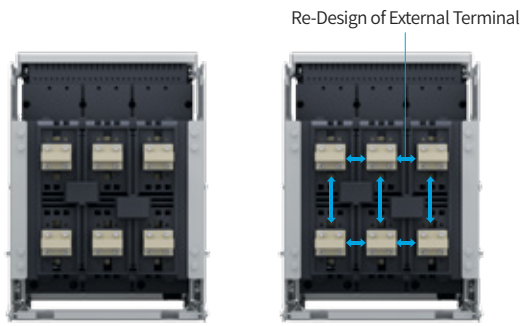

Standard Cradle

Cradle Retrofit

Equipped with Temperature Sensor

Reliable high temperature measurement is possible following the sensor measurement of the heat source (Range of measurement : -5 ~ 250 degrees)

Example of IR Sensor Application

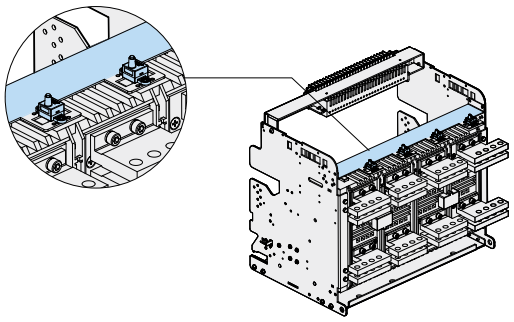

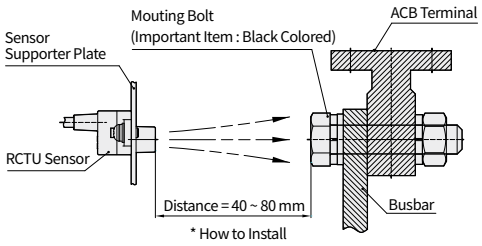

Address Setting : 1 ~ 240

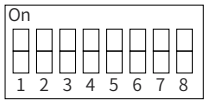

Baud Rate Setting

Set		Description
Off	Off	9,600
Off	On	19,200
On	Off	38,400

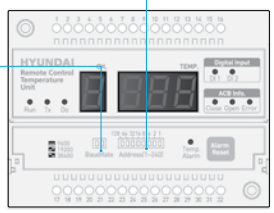

Installation of IR Sensor

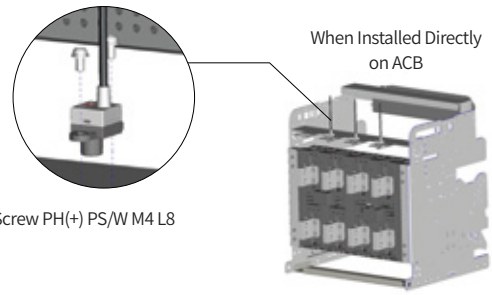

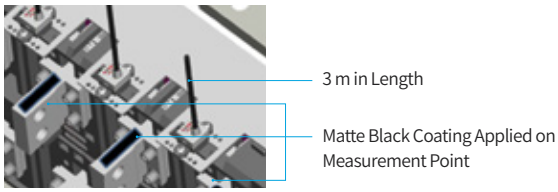

- IR temperature sensor has to be installed with sufficient insulation distance from the point to be measured
- The recommended distance between the measurement point and temperature sensor is 50 ~ 80 mm.
- The measurement point has to be a surface without reflection due to the characteristics of the IR sensor and matte black painting is recommended for the measurement point.

⚠ Caution

1. The measurement value of the IR sensor differs depending on the reflection rate of the metal surface. Surfaces coated with matte black or surface with varnish excluding metallic varnish must be measured.
2. The size of measurement point differs depending on the D : S Ratio for the surface to be measured and the IR distance. This sensor has a ratio of 8 : 1.

Applied Standards and Certifications

HG Series air circuit breaker has acquired testing/certifications from IEC 60947-1, 2 certified testing institute and can be installed and applied according to the usage environment and conditions permitted by the standards.

Acquired Standards and Certifications

- KS Certification : KS C 4620
- CB Certification (DEKRA, KERI) : IEC 60947-1, 2
- CE Mark
- CCC Certification
- Vessel Certification : LR, ABS, KR, BV, GL, NK, RINA, DNV, RS
- 9 Major Vessel Certifications : KR, GL, LR, ABS, BV, NK, RINA, DNV, RS

Technical Data

External Structure

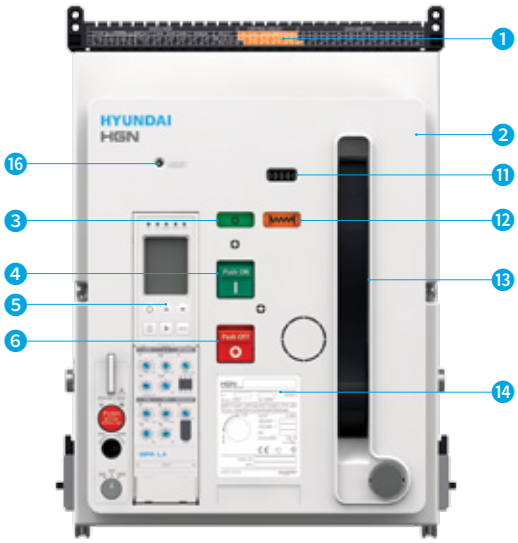

Fixed Type

Draw-In/Out Type (Including Cradle)

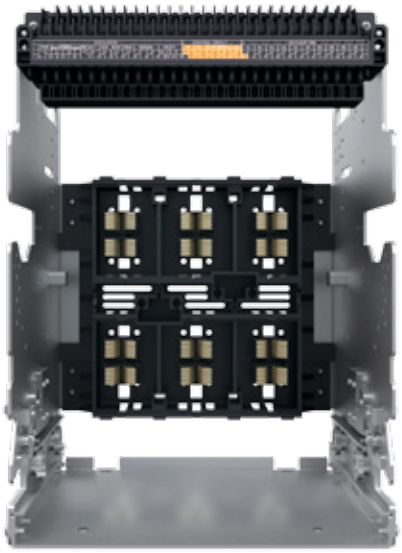

Cradle Front

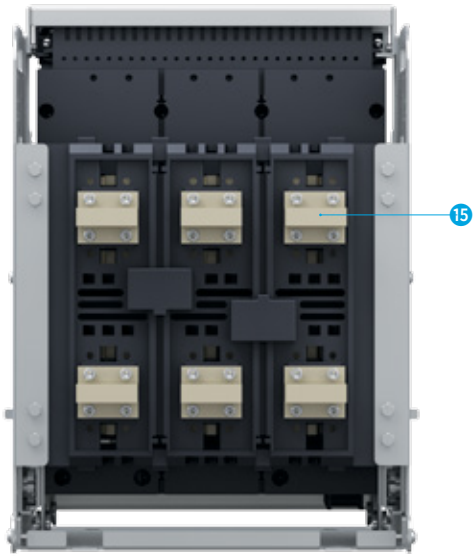

Cradle Rear

1. Control Circuit Terminal
2. Front Cover
3. Close/Open Indicator
4. Close Button
5. Overcurrent Relay Device
6. Open Button
7. Position Padlock
8. Position Lock Release Button
9. Draw-In/Out Handle Insertion Hole
10. Position Indicator
11. Counter
12. Charged/Discharged Indicator
13. Manual Charging Handle
14. Rating Nameplate
15. Terminal Busbar
16. OCR & Alarm S/W Reset Button
17. Draw-In/Out Guide Rail

Internal Structure

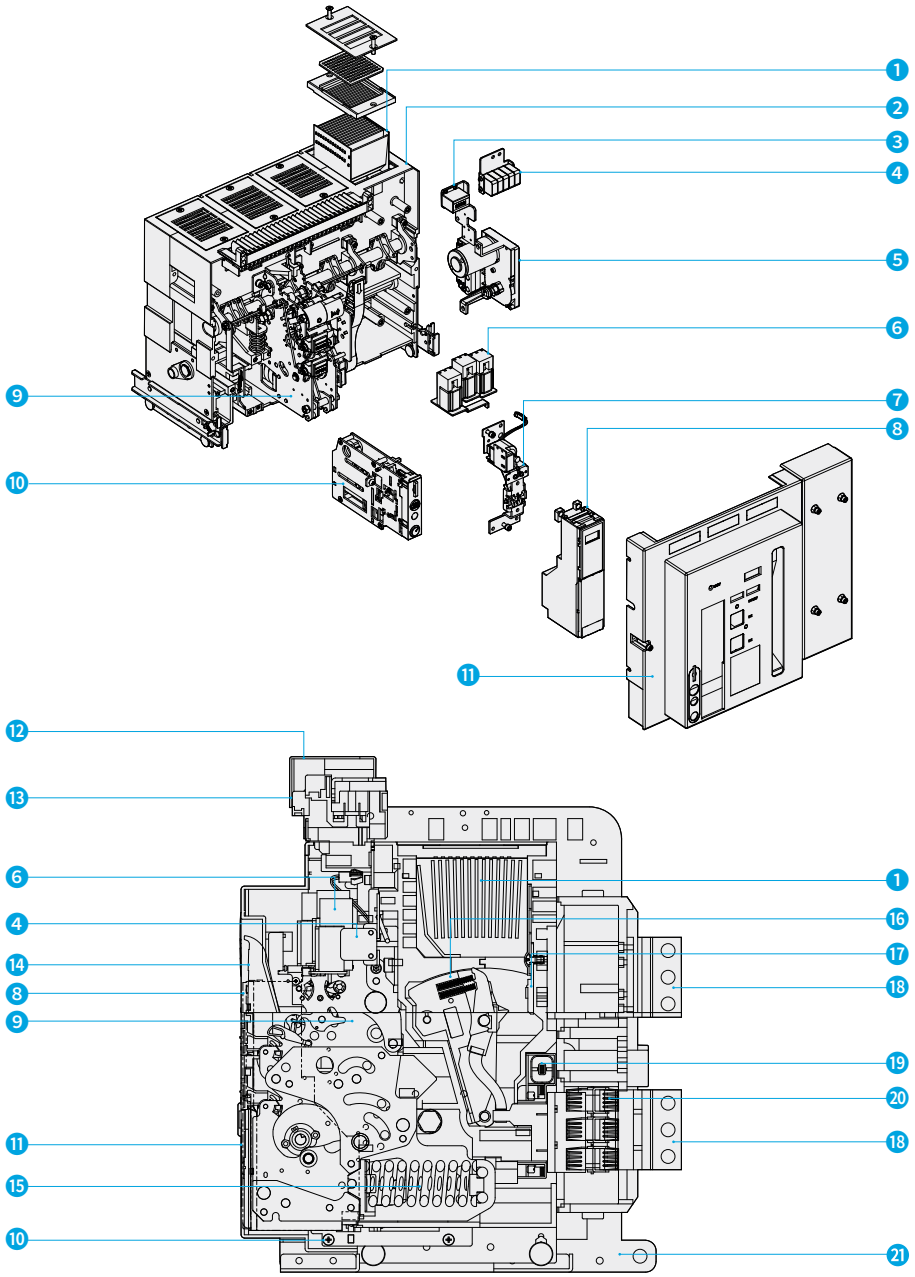

1. DI Grid
2. CO Unit
3. Counter
4. AUX Switch
5. Motor
6. Closing/Trip/UVT Coil
7. MHT Device
8. OCR
9. Mechanism
10. DR Device
11. Cover
12. Control Terminal Protection Cover
13. Control Terminal
14. Manual Charging Handle
15. Closing Spring
16. Moving Contact
17. Fixed Contact
18. Terminal
19. Current Transformer(CT)
20. Terminal Clip
21. Cradle

※ HG Series air circuit breaker has been designed so that upon closing, the N phase is closed earlier than R, S, T phase and upon opening, the N phase is disconnected last in order to reduce burden of main contact and to prevent ripple effect of accident of N phase.

Technical Data

Connection Method

User convenience has been reinforced by allowing each terminal to be rotated 90 degrees directly on site depending on the busbar type of low voltage switchgear.

Standard Type

Vertical Type

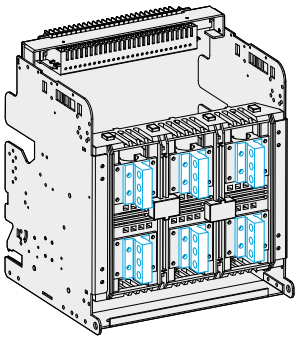

Horizontal Type

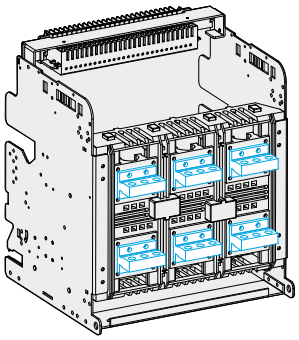

Front Type

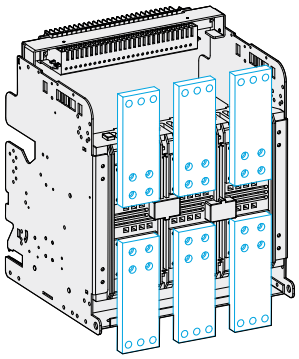

Combined Type

(Upper) Vertical Type +
(Lower) Horizontal Type

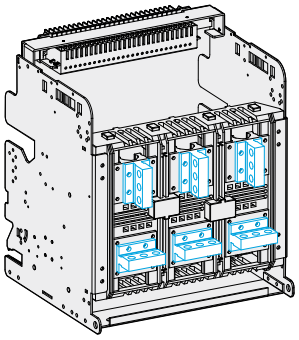

(Upper) Horizontal Type +
(Lower) Vertical Type

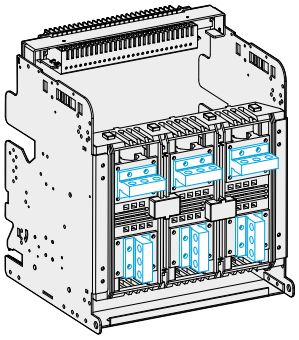

(Upper) Vertical Type +
(Lower) Front Type

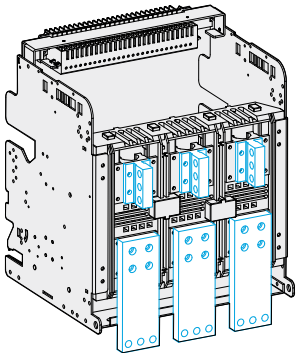

(Upper) Horizontal Type +
(Lower) Front Type

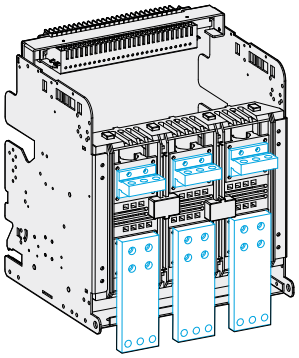

(Upper) Front Type +
(Lower) Vertical Type

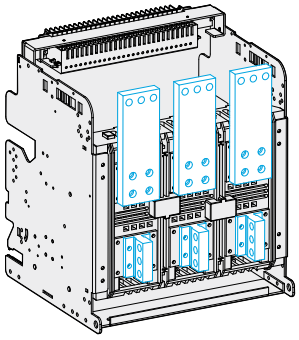

(Upper) Front Type +
(Lower) Horizontal Type

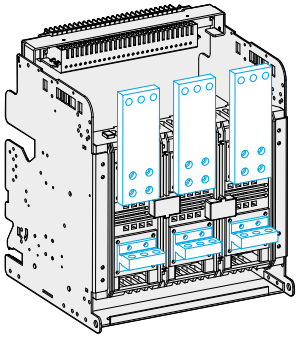

※ Terminal change is only possible for HGS/HGN A frame 630 ~ 1,600 A, B frame 2,000 ~ 3,200 A.
Front type is a terminal form that is suitable for switchgear with spatial restrictions.
Horizontal/vertical change above 4,000 A requires separate parts so please contact our company.
In case of B frame, 3,200 A terminal is provided as for the front type provided separately for 2,000/2,500 A.
Front type terminal has to be purchased separately.

Convenient Connection Method

As for HG Series air circuit breaker, 4 types of mounting (Connected, test, isolated, removed) are possible and offer easy maintenance.

Sliding Body Type (In Case of Draw-In/Out Type)

Connected Position

As a commonly used status, the main circuit and control circuit are both connected.

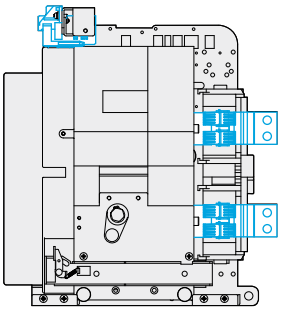

Test Position

As a status in which the main circuit is isolated and the control circuit is connected, the circuit breaker can be turned On/Off with the switchgear door closed.

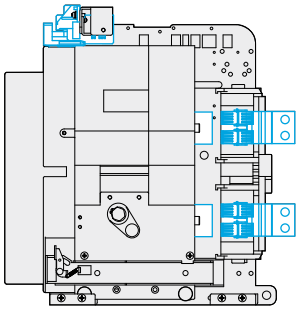

Isolated Position

With the main circuit and control circuit both isolated, the air circuit cannot be turned On/Off.

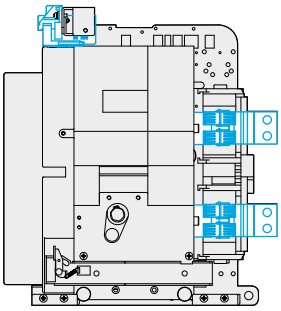

Removed Position

The air circuit has completely been removed from the cradle.

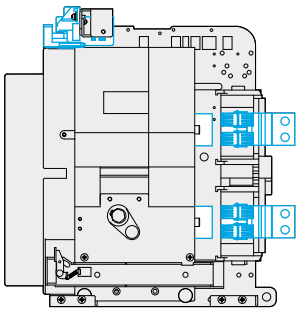

Technical Data

Various Accessories (Main Unit)

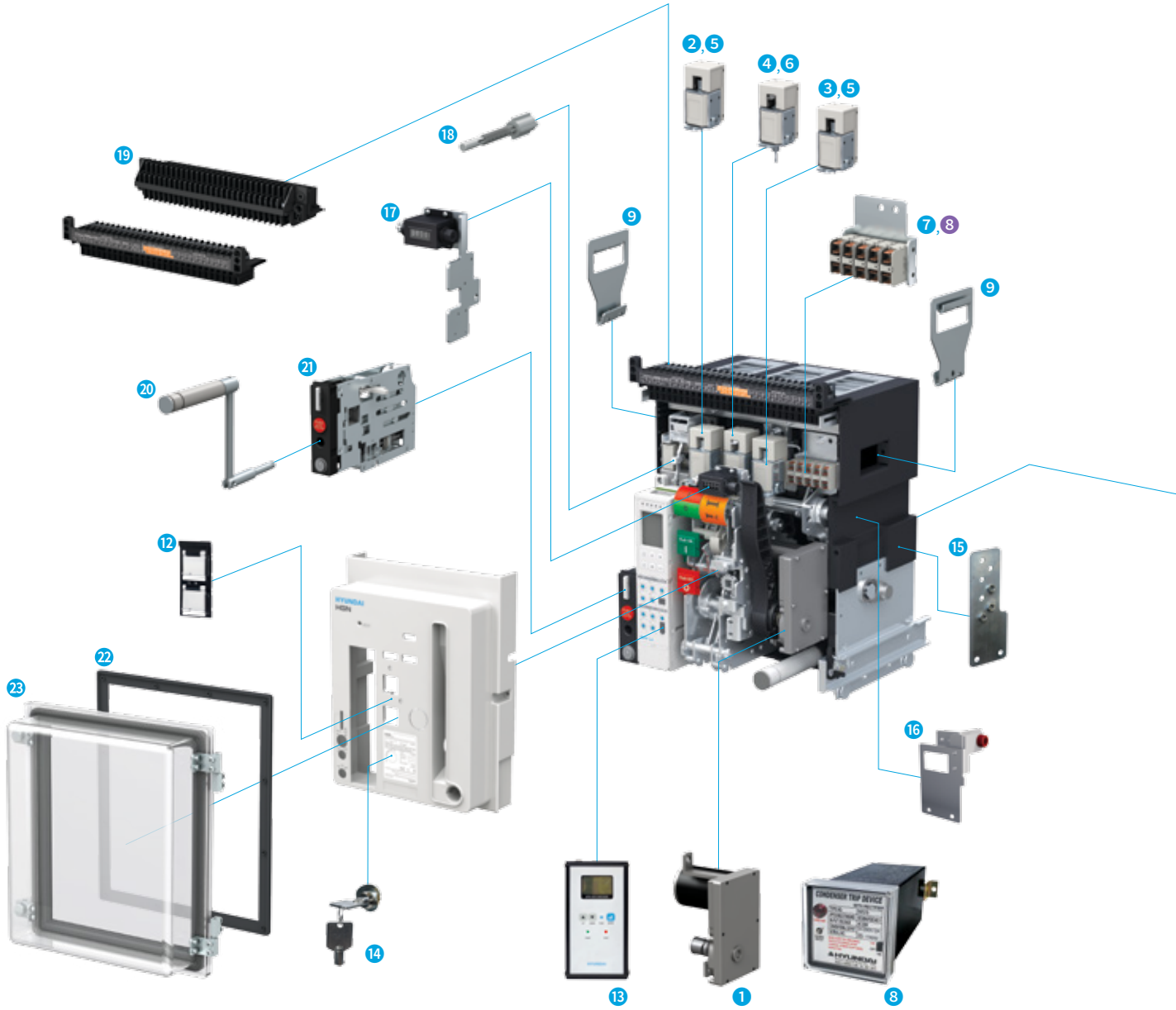

Accessories for Circuit Breaker

1. Spring Charge Geared Motor
2. Closing Coil
3. Trip Coil
4. Secondary Trip Coil
5. Trip Coil Supervision
6. UVT Coil
7. AUX Switch
8. Condenser Trip Device (CTD)
9. Lifting Lug
10. Mechanical Interlock
11. Phase Insulation Barrier
12. On/Off Button Lock
13. OCR Portable Checker
14. Key Lock
15. Miss-Insertion Preventer
16. Fixing Block
17. Counter
18. OCR & Alarm S/W Reset Button
19. Test Jumper
20. Draw-In/Out Handle
21. Position Pad Lock
22. Door Flange
23. Dust Cover

Various Accessories (Cradle)

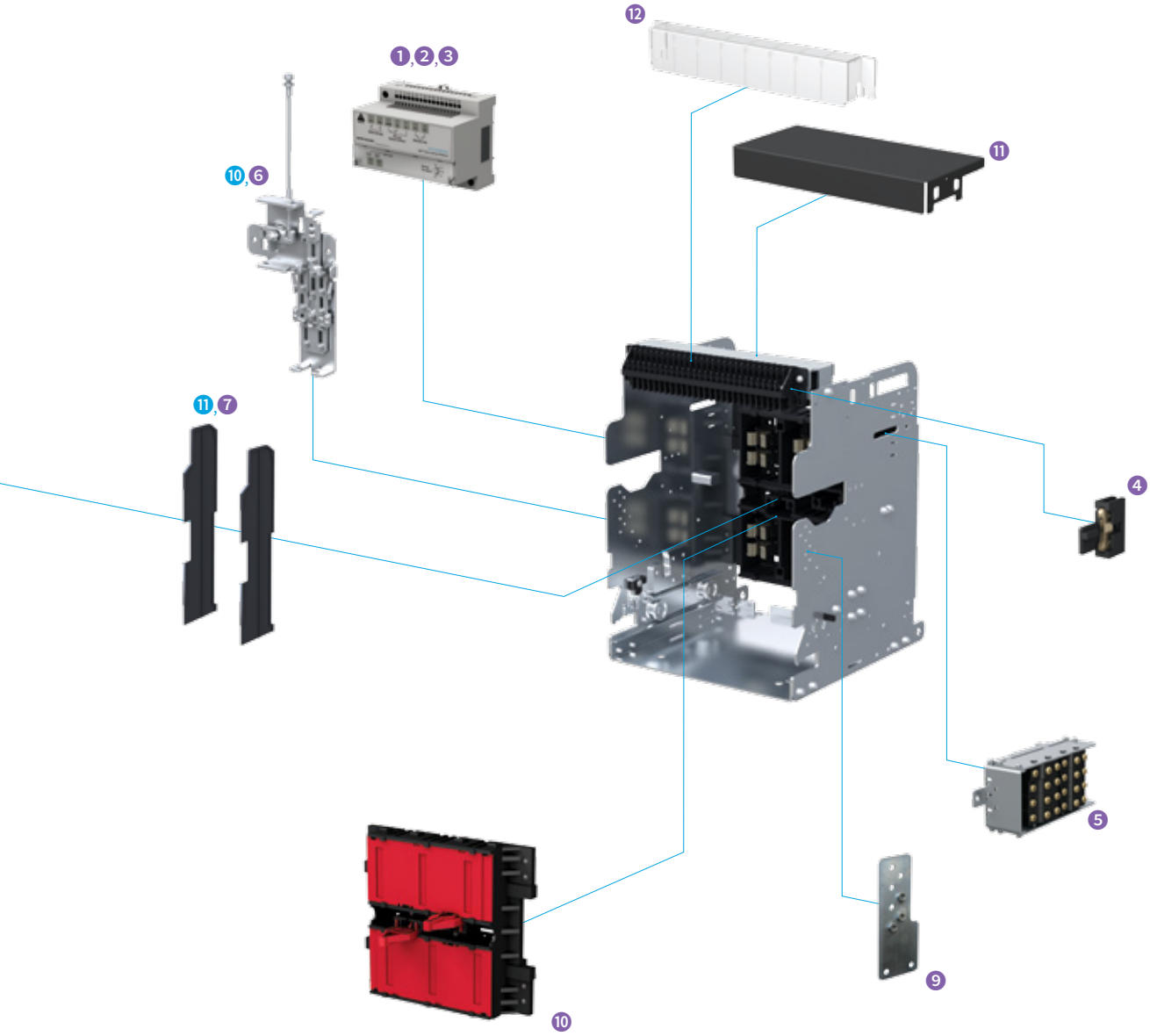

Accessories for Cradle

1. UVT Time Delay Controller
2. Remote Closing Prevention Module
3. Temperature Monitoring Device Module
4. Short “b” Contact
5. Position Switch
6. Mechanical Interlock
7. Phase Insulation Barrier
8. Mechanical Operated Cell Switch
9. Miss-Insertion Preventer
10. Safety Shutter
11. Arc Shield
12. Control Terminal Protection Cover

Model Selection Table

Rating and Specification

Model Name			HGS		HGN			
Item			**A Frame**	**B Frame**	**A Frame**	**B Frame**	**C Frame**	**D Frame**
Rated Current [In max]	Based on 40 °C	A	06 : 630	20 : 2,000	06 : 630	06 : 630	32 : 3,200	40 : 4,000
			08 : 800	25 : 2,500	08 : 800	08 : 800	40 : 4,000	50 : 5,000
			10 : 1,000	32 : 3,200	10 : 1,000	10 : 1,000	50 : 5,000	63 : 6,300
			12 : 1,250		12 : 1,250	12 : 1,250		
			16 : 1,600		16 : 1,600	16 : 1,600		
					20 : 2,000	20 : 2,000		
						25 : 2,500		
						32 : 3,200		
						40 : 4,000		
Rated Operational Voltage [Ue]		V	690		690			
Rated Insulation Voltage [Ui]		V	1,000		1,000			
Frequency		Hz	50/60		50/60			
No. of Poles		P	3, 4		3, 4			
Current Setting Range (…× In max)		A	0.4 ~ 1.0		0.4 ~ 1.0			
Rated Current of Neutral Pole (N) (··· %×In)		A	100 %	100 %	100 %	100 %	100 %	100 %
Rated Breaking Capacity [Icu] [Sym]								
IEC 60947-2 Category "B" KS C 4620	AC 690/600/550 V	kA	50	70 [1] (KS : 65)	65	85	85	100
	AC 500/480/460 V	kA	65	85	85	100	100	150
	AC 415/380/230/220 V	kA	65	85	85	100	100	150
Rated Service Short-Circuit Breaking Capacity [Ics] ···%×Icu		kA	100 %	100 %	100 %	100 %	100 %	100 %
Rated Closing Current [Icm] [Peak]								
IEC 60947-2 Category "B" KS C 4620	AC 690/600/550 V	kA	105	154	143	187	187	220
	AC 500/480/460 V	kA	143	187	187	220	220	330
	AC 415/380/230/220 V	kA	143	187	187	220	220	330
Rated Short-Time withstand Voltage [Icw] (Without Inst)								
1 Second		kA	50	70	65	85	85	100
2 Seconds		kA	35	65	42	75	75	85
3 Seconds		kA	28	50	35	65	65	75
Rated Impulse withstand Voltage [Uimp]		kV	12		12			
Total Breaking-Time		ms	40 [3]		40 [3]			
Closing Operational Time								
Motor Charging Time (sec) max.			10		10			
Rated Trip Time (ms) max.			80		80			
Lifecycle (Cycles)								
Mechanical	Without Maintenance		20,000	20,000	20,000	20,000	10,000	5,000
	With Maintenance		30,000	30,000	30,000	30,000	15,000	10,000
Electrical	Without Maintenance		5,000	5,000	5,000	20 : 5,000 25 ~ 40 : 3,000	2,000	2,000
	With Maintenance		10,000	10,000	10,000	20 : 10,000 25 ~ 40 : 8,000	5,000	5,000
Weight								
3 Pole	Draw-Out Type	kg	63	87	63	87 (107) [2]	145	169
	Fixed Type	kg	34	44	34	44 (61) [2]	76	108
4 Pole	Draw-Out Type	kg	74	103	74	103 (140) [2]	173	214
	Fixed Type	kg	44	55	44	55 (80) [2]	81	137
(W×H×D)								
3 Pole	Draw-Out Type	mm	328×460×368.4	399×460×368.4	328×460×368.4	399×460×368.4	624×460×368.4	766×460×368.4
	Fixed Type	mm	337.4×404.4×295.8	408.4×404.4×295.8	337.4×404.4×295.8	408.4×404.4×295.8	633.4×404.4×295.8	775.4×404.4×295.8
4 Pole	Draw-Out Type	mm	413×460×368.4	514×460×368.4	413×460×368.4	514×460×368.4	794×460×368.4	996×460×368.4
	Fixed Type	mm	422.4×404.4×295.8	523.4×404.4×295.8	422.4×404.4×295.8	523.4×404.4×295.8	803.4×404.4×295.8	1,005×404.4×295.8

※ 1) 70 kA is DEKRA certified
2) 4,000 AF
3) In case of MCR and override setting, INST is 50 ms.

Life time is the limit lifespan and is not the guaranteed lifespan. In case of maintenance, it is charged. In the event of abnormalities in accessories during use, it can be replaced. Quality Assurance : Based on IEC 60947-2's number of opening/closing within the warranty period.

Fixed Type

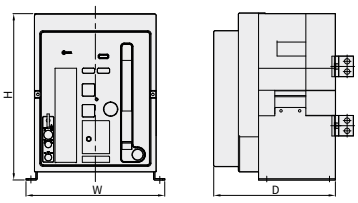

Draw-Out Type

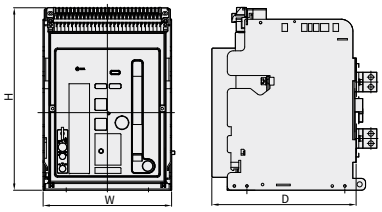

Over Current Relay (OCR)

Function	General Feeder						Generator (Marine Type)		
Model Name	N Type	A Type			P Type	H Type	N Type	A Type	P Type
	GPR-LN	GPR-LA	GPR-LAG	GPR-LAZ	GPR-LP	GPR-LH	GPR-SN	GPR-SA	GPR-SP
Frequency									
50 Hz	50	51	52	53	54	55	57	58	59
60 Hz	60	61	62	63	64	65	67	68	69
Control Power									
External Power	–	●	●	●	●	●	–	●	●
Self-Power	●	●	●	●	●	●	●	●	●
Protection Function									
LTD (Long Time)	●	●	●	●	●	●	●	●	●
STD (Short Time)	●	●	●	●	●	●	●	●	●
INST (Instantaneous)	●	●	●	●	●	●	●	●	●
Pre-Trip Alarm	–	●	●	●	●	●	–	●	●
Ground Fault Trip	●	●	–	–	●	●	–	–	–
ELT Function	–	–	● Outer CT Ground [2] (Ground fault at more than 30 A)	● ZCT Earth Leakage [3] (Below 30 A)	–	–	–	–	–
Thermal Function	●	●	●	●	●	●	●	●	●
Field Test	–	●	●	●	●	●	–	●	●
Fail Safe	●	●	●	●	●	●	●	●	●
Indication									
True RMS Detection Method	●	●	●	●	●	●	●	●	●
LED Indication per Trip Type	–	●	●	●	●	●	–	●	●
Fault LED	L [1]	PTA, L, S/I, G	PTA, L, S/I, leakage	PTA, L, S/I, leakage	PTA, L, S/I, G	PTA, L, S/I, G	L [1]	PTA, L, S/I	PTA, L, S/I
Real-Time LCD Indication of Load Rate per Phase	–	●	●	●	●	●	–	●	●
Measurement LCD	–	●	●	●	●	●	–	●	●
Output Contact									
Integrated Instantaneous Contact (1a)	●	–	–	–	–	–		–	–
Individual Continuous Contact (4a)	–	●	●	●	●	●	–	● [4]	● [4]
Operation									
MCR	–	○	○	○	○	○	–	○	○
Communication	NFC	Modbus-RTU	Modbus-RTU	Modbus-RTU	Modbus-RTU	Modbus-RTU	NFC	Modbus-RTU	Modbus-RTU
Event/Fault Recording	●	●	●	●	●	●	●	●	●

※ ● : Standard, ○ : Option

1) Indicates reserve before operation during long time delay.
2) ZCT designated by the customer is used.
3) ZCT designated by our company is used.
4) As for marine type, individual continuous contact is 3a.

Model Selection Table

Selective Breaking Method of Protection Coordination

- Upstream : ACB HGN/HGS
- Downstream : MCB HGD, MCCB HGM/HGP

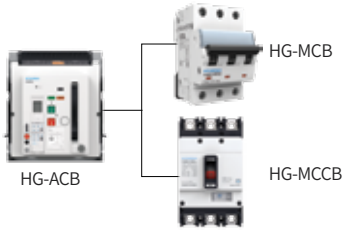

Upstream →

Downstream ↓

Item	Model Name	Rated Current (A)	Rated Breaking Current [Icu] (kA rms)	ACB											
				HGS/HGN A Frame						HGS/HGN B Frame				HGN C Frame	
				630	800	1,000	1,250	1,600	2,000	2,000	2,500	3,200	4,000	4,000	5,000
				85	85	85	85	85	85	100	100	100	100	100	100
MCB	HGD63E B, C, D Curve	1	3	T	T	T	T	T	T	T	T	T	T	T	T
		2	3	T	T	T	T	T	T	T	T	T	T	T	T
		3	3	T	T	T	T	T	T	T	T	T	T	T	T
		4	3	T	T	T	T	T	T	T	T	T	T	T	T
		5	3	T	T	T	T	T	T	T	T	T	T	T	T
		6	3	T	T	T	T	T	T	T	T	T	T	T	T
		10	3	T	T	T	T	T	T	T	T	T	T	T	T
		13	3	T	T	T	T	T	T	T	T	T	T	T	T
		15	3	T	T	T	T	T	T	T	T	T	T	T	T
		16	3	T	T	T	T	T	T	T	T	T	T	T	T
		20	3	T	T	T	T	T	T	T	T	T	T	T	T
		25	3	T	T	T	T	T	T	T	T	T	T	T	T
		32	3	T	T	T	T	T	T	T	T	T	T	T	T
		40	3	T	T	T	T	T	T	T	T	T	T	T	T
		50	3	T	T	T	T	T	T	T	T	T	T	T	T
		63	3	T	T	T	T	T	T	T	T	T	T	T	T
	HGD63S B, C, D Curve	1	4.5	T	T	T	T	T	T	T	T	T	T	T	T
		2	4.5	T	T	T	T	T	T	T	T	T	T	T	T
		3	4.5	T	T	T	T	T	T	T	T	T	T	T	T
		4	4.5	T	T	T	T	T	T	T	T	T	T	T	T
		5	4.5	T	T	T	T	T	T	T	T	T	T	T	T
		6	4.5	T	T	T	T	T	T	T	T	T	T	T	T
		10	4.5	T	T	T	T	T	T	T	T	T	T	T	T
		13	4.5	T	T	T	T	T	T	T	T	T	T	T	T
		15	4.5	T	T	T	T	T	T	T	T	T	T	T	T
		16	4.5	T	T	T	T	T	T	T	T	T	T	T	T
		20	4.5	T	T	T	T	T	T	T	T	T	T	T	T
		25	4.5	T	T	T	T	T	T	T	T	T	T	T	T
		32	4.5	T	T	T	T	T	T	T	T	T	T	T	T
		40	4.5	T	T	T	T	T	T	T	T	T	T	T	T
		50	4.5	T	T	T	T	T	T	T	T	T	T	T	T
		63	4.5	T	T	T	T	T	T	T	T	T	T	T	T
	HGD63N/M B, C, D Curve	1	6	T	T	T	T	T	T	T	T	T	T	T	T
		2	6	T	T	T	T	T	T	T	T	T	T	T	T
		3	6	T	T	T	T	T	T	T	T	T	T	T	T
		4	6	T	T	T	T	T	T	T	T	T	T	T	T
		5	6	T	T	T	T	T	T	T	T	T	T	T	T
		6	6	T	T	T	T	T	T	T	T	T	T	T	T
		10	6	T	T	T	T	T	T	T	T	T	T	T	T
		13	6	T	T	T	T	T	T	T	T	T	T	T	T
		15	6	T	T	T	T	T	T	T	T	T	T	T	T
		16	6	T	T	T	T	T	T	T	T	T	T	T	T
		20	6	T	T	T	T	T	T	T	T	T	T	T	T
		25	6	T	T	T	T	T	T	T	T	T	T	T	T

※ T Selective breaking is possible in all sectors, ☐ Selective breaking is impossible in this sector.

- Upstream : ACB HGN/HGS
- Downstream : MCB HGD, MCCB HGM/HGP

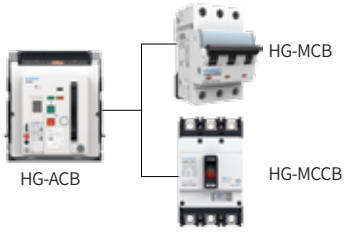

Upstream →

Downstream ↓

Item	Model Name	Rated Current (A)	Rated Breaking Current [Icu] (kA rms)	ACB											
				HGS/HGN A Frame						HGS/HGN B Frame				HGN C Frame	
				630	800	1,000	1,250	1,600	2,000	2,000	2,500	3,200	4,000	4,000	5,000
				85	85	85	85	85	85	100	100	100	100	100	100
MCB	HGD63N/M B, C, D Curve	32	6	T	T	T	T	T	T	T	T	T	T	T	T
		40	6	T	T	T	T	T	T	T	T	T	T	T	T
		50	6	T	T	T	T	T	T	T	T	T	T	T	T
		63	6	T	T	T	T	T	T	T	T	T	T	T	T
	HGD63H B, C, D Curve	1	10	T	T	T	T	T	T	T	T	T	T	T	T
		2	10	T	T	T	T	T	T	T	T	T	T	T	T
		3	10	T	T	T	T	T	T	T	T	T	T	T	T
		4	10	T	T	T	T	T	T	T	T	T	T	T	T
		5	10	T	T	T	T	T	T	T	T	T	T	T	T
		6	10	T	T	T	T	T	T	T	T	T	T	T	T
		10	10	T	T	T	T	T	T	T	T	T	T	T	T
		13	10	T	T	T	T	T	T	T	T	T	T	T	T
		15	10	T	T	T	T	T	T	T	T	T	T	T	T
		16	10	T	T	T	T	T	T	T	T	T	T	T	T
		20	10	T	T	T	T	T	T	T	T	T	T	T	T
		25	10	T	T	T	T	T	T	T	T	T	T	T	T
		32	10	T	T	T	T	T	T	T	T	T	T	T	T
		40	10	T	T	T	T	T	T	T	T	T	T	T	T
		50	10	T	T	T	T	T	T	T	T	T	T	T	T
		63	10	T	T	T	T	T	T	T	T	T	T	T	T
	HGD125 B, C, D Curve	80	10	T	T	T	T	T	T	T	T	T	T	T	T
		100	10	T	T	T	T	T	T	T	T	T	T	T	T
		125	10	T	T	T	T	T	T	T	T	T	T	T	T
MCCB	HGM100	16	30	T	T	T	T	T	T	T	T	T	T	T	T
		20	30	T	T	T	T	T	T	T	T	T	T	T	T
		25	30	T	T	T	T	T	T	T	T	T	T	T	T
		32	30	T	T	T	T	T	T	T	T	T	T	T	T
		40	30	T	T	T	T	T	T	T	T	T	T	T	T
		50	30	T	T	T	T	T	T	T	T	T	T	T	T
		63	30	T	T	T	T	T	T	T	T	T	T	T	T
		75	30	T	T	T	T	T	T	T	T	T	T	T	T
		80	30	T	T	T	T	T	T	T	T	T	T	T	T
		100	30	T	T	T	T	T	T	T	T	T	T	T	T
	HGM125	16	55	T	T	T	T	T	T	T	T	T	T	T	T
		20	55	T	T	T	T	T	T	T	T	T	T	T	T
		25	55	T	T	T	T	T	T	T	T	T	T	T	T
		32	55	T	T	T	T	T	T	T	T	T	T	T	T
		40	55	T	T	T	T	T	T	T	T	T	T	T	T
		50	55	T	T	T	T	T	T	T	T	T	T	T	T
		63	55	T	T	T	T	T	T	T	T	T	T	T	T
		75	55	T	T	T	T	T	T	T	T	T	T	T	T
		80	55	T	T	T	T	T	T	T	T	T	T	T	T
		100	55	T	T	T	T	T	T	T	T	T	T	T	T
		125	55	T	T	T	T	T	T	T	T	T	T	T	T

※ T Selective breaking is possible in all sectors, ☐ Selective breaking is impossible in this sector.
MCCB Rated Breaking Current : Based on AC 440/460 V, HGM L-Type, HGP X-Type

Model Selection Table

Selective Breaking Method of Protection Coordination

- Upstream : ACB HGN/HGS
- Downstream : MCB HGD, MCCB HGM/HGP

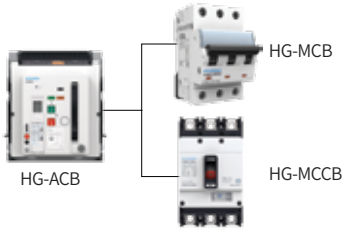

Upstream →

Downstream ↓

Item	Model Name	Rated Current (A)	Rated Breaking Current [Icu] (kA rms)	ACB											
				HGS/HGN A Frame						HGS/HGN B Frame				HGN C Frame	
				630	800	1,000	1,250	1,600	2,000	2,000	2,500	3,200	4,000	4,000	5,000
				85	85	85	85	85	85	100	100	100	100	100	100
MCCB	HGM250	100	55	T	T	T	T	T	T	T	T	T	T	T	T
		125	55	T	T	T	T	T	T	T	T	T	T	T	T
		150	55	T	T	T	T	T	T	T	T	T	T	T	T
		160	55	T	T	T	T	T	T	T	T	T	T	T	T
		175	55	T	T	T	T	T	T	T	T	T	T	T	T
		200	55	T	T	T	T	T	T	T	T	T	T	T	T
		225	55	T	T	T	T	T	T	T	T	T	T	T	T
		250	55	T	T	T	T	T	T	T	T	T	T	T	T
	HGM400	250	85	T	T	T	T	T	T	T	T	T	T	T	T
		300	85	T	T	T	T	T	T	T	T	T	T	T	T
		350	85	T	T	T	T	T	T	T	T	T	T	T	T
		400	85	T	T	T	T	T	T	T	T	T	T	T	T
	HGM630	500	85		T	T	T	T	T	T	T	T	T	T	T
		630	85		T	T	T	T	T	T	T	T	T	T	T
	HGM800	700	85			T	T	T	T	T	T	T	T	T	T
		800	85			T	T	T	T	T	T	T	T	T	T
	HGP125D	16	150	T	T	T	T	T	T	T	T	T	T	T	T
		20	150	T	T	T	T	T	T	T	T	T	T	T	T
		25	150	T	T	T	T	T	T	T	T	T	T	T	T
		32	150	T	T	T	T	T	T	T	T	T	T	T	T
		40	150	T	T	T	T	T	T	T	T	T	T	T	T
		50	150	T	T	T	T	T	T	T	T	T	T	T	T
		63	150	T	T	T	T	T	T	T	T	T	T	T	T
		80	150	T	T	T	T	T	T	T	T	T	T	T	T
		100	150	T	T	T	T	T	T	T	T	T	T	T	T
		125	150	T	T	T	T	T	T	T	T	T	T	T	T
	HGP250	100	150	T	T	T	T	T	T	T	T	T	T	T	T
		125	150	T	T	T	T	T	T	T	T	T	T	T	T
		150	150	T	T	T	T	T	T	T	T	T	T	T	T
		160	150	T	T	T	T	T	T	T	T	T	T	T	T
		175	150	T	T	T	T	T	T	T	T	T	T	T	T
		200	150	T	T	T	T	T	T	T	T	T	T	T	T
		225	150	T	T	T	T	T	T	T	T	T	T	T	T
		250	150	T	T	T	T	T	T	T	T	T	T	T	T
	HGP400	300	150	T	T	T	T	T	T	T	T	T	T	T	T
		350	150	T	T	T	T	T	T	T	T	T	T	T	T
		400	150	T	T	T	T	T	T	T	T	T	T	T	T
	HGP630	500	150		T	T	T	T	T	T	T	T	T	T	T
		630	150		T	T	T	T	T	T	T	T	T	T	T
	HGP800	700	150			T	T	T	T	T	T	T	T	T	T
		800	150			T	T	T	T	T	T	T	T	T	T

※ T Selective breaking is possible in all sectors, ☐ Selective breaking is impossible in this sector.
MCCB Rated Breaking Current : Based on AC 440/460 V, HGM L-Type, HGP X-Type

Accessories

Over Current Relay (OCR)

External

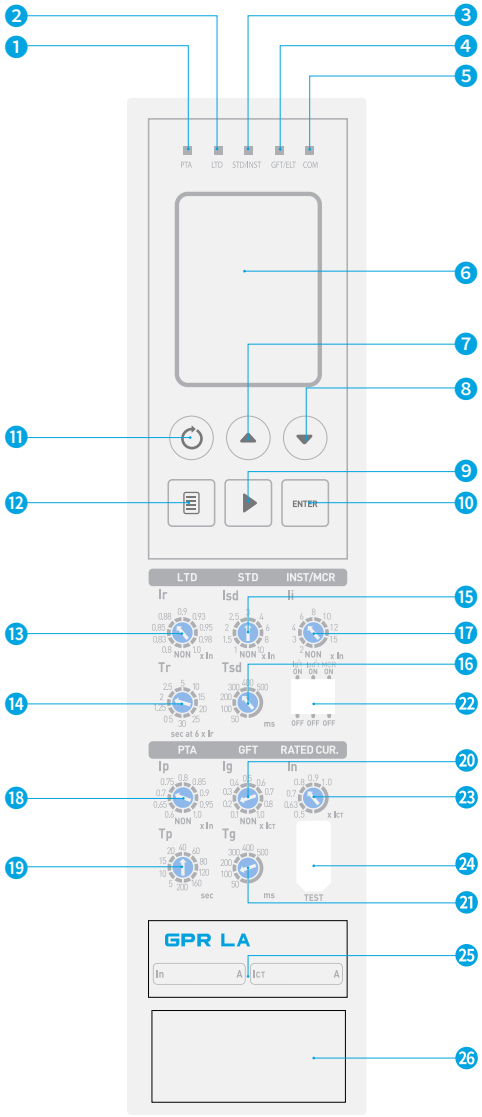

1. PTA Signal LED
2. LTD Signal LED
3. STD/INST Signal LED
4. GFT/ELT Signal LED
5. Com. Signal LED
6. LCD/NFC Antenna (LN, SN)
7. STD/INST Test Button
8. LTD Test Button
9. Movement Button
10. Enter Button
11. Reset Button
12. Menu Button
13. LTD Pick Up Setting
14. LTD Operational Time Setting
15. STD Pick Up Setting
16. STD Operational Time Setting
17. INST Pick Up Setting
18. PTA Pick Up Setting
19. PTA Operational Time Setting
20. GFT/ELT Pick Up Setting
21. GFT/ELT Operational Time Setting
22. GFT/STD (Inverse Time Setting)., MCR On/Off Setting Switch
23. In (Rated Current) Setting
24. Temporary Test Connection Jack
25. Model Name
26. Battery

※ Self-power functions normally in the case of 10 % for 3 phases and 30 % for a single phase. However, when 200 A ~ 320 A CT is used, it functions normally in case of 50 % for 3 phase and more than 100 % for single phase.
When using MCR function, mark B8 in the name of order type. Auxiliary contact point is 4a5b.
The lifespan of the battery is usually 10 years so in case it is time for replacement, contact our customer support division and services can be received at a cost.
High/low test function is automatically disabled when a load current is applied.

Accessories

Over Current Relay (OCR)

Enhancement of Over Current Relay (OCR) Functions

Over current relay (OCR) built in the HG Series air circuit breaker has reinforced power monitoring functions such as temperature monitoring, fault recording other than the basic protection function, ultimately enabling stable power supply.

Item		General Feeder				
Model Name		N Type	A Type			P Type
		GPR-LN	GPR-LA	GPR-LAG (Outer CT Ground)	GPR-LAZ (Outer CT Earth Leakage)	GPR-LP
Externals						
Frequency	50 Hz	50	51	52	53	54
	60 Hz	60	61	62	63	64
Main Functions		• L/S/I/G • Thermal • Self-Power • Fail Safe • Integrated Instantaneous Contact • 10 ea Fault Recording (Check Via Communication) • Last Fault's Waveform Recording (4 Cycles, Check Via Communication)	• L/S/I/G • Thermal • Self-Power • Fail Safe • Communication (Modbus) • External Power • ZSI • Remote Reset Function • Individual Continuous Contact : LTD, STD/INST, GFT, PTA • 256 ea Fault Recording • Last Fault's Waveform Recording (4 Cycles, Check Via Communication) • 200 ea Event Recording (Check Via Communication)	• L/S/I Uses Dedicated Outer CT Ground if Outer CT Ground (More than 30 A) > 5 A at Secondary) • Thermal • Self-Power • Fail Safe • Communication (Modbus) • External Power • ZSI • Remote Reset Function • Individual Continuous Contact : LTD, STD/INST, GFT, PTA • 256 ea Fault Recording • Last Fault's Waveform Recording (4 Cycles, Check Via Communication) • 200 ea Event Recording (Check Via Communication)	• L/S/I Uses Dedicated Outer CT if ZCT Earth Leakage (Below 30 A) > 1,000 : 1 A • Thermal • Self-Power • Fail Safe • Communication (Modbus) • External Power • ZSI • Remote Reset Function • Individual Continuous Contact : LTD, STD/INST, GFT, PTA • 256 ea Fault Recording • Last Fault's Waveform Recording (4 Cycles, Check Via Communication) • 200 ea Event Recording (Check Via Communication)	• L/S/I/G • Thermal • Self-Power • Fail Safe • Communication (Modbus) • External Power • ZSI • Remote Reset Function • Individual Continuous Contact : LTD, STD/INST, GFT, PTA • 256 ea Fault Recording • Last Fault's Waveform Recording (4 Cycles, Check Via Communication) • 200 ea Event Recording (Check Via Communication) • Over-Voltage/ Under-Voltage • Imbalance Type (Voltage/Current) • Reverse Power • 3 Phase Voltage/Current RMS/Vector • Power (P, Q, S), Power Factor (3 Phase) • Energy (Normal/Reverse Direction) • Demand

Item	General Feeder	Generator (Marine Type)		
Model Name	H Type	N Type	A Type	P Type
	GPR-LH	GPR-SN	GPR-SA	GPR-SP
Externals				
Frequency 50 Hz	55	57	58	59
Frequency 60 Hz	65	67	68	69
Main Functions	· L/S/I/G · Thermal · IDMTL · Self-Power · Fail Safe · Communication (Modbus) · External Power · ZSI · Remote Reset Function · Individual Continuous Contact : LTD, STD/INST, GFT, PTA · 256 ea Fault Recording · Last Fault's Waveform Recording (4 Cycles, Check Via Communication) · 200 ea Event Recording · Over-Voltage/Under-Voltage · Imbalance Type (Voltage/Current) · Reverse Power · 3 Phase Voltage/Current RMS/ Vector · Power (P, Q, S), Power Factor (3 Phase) · Energy (Normal/Reverse Direction) · Frequency, Demand · Minute Current Adjustment at Long Time, Short Time, Instantaneous, Ground Setting · Voltage/Current Harmonics (1 st ~ 63 th) · View 3 Phase Waveform · THD, TDD	· L/S/I · Minute Current Adjustment · Thermal · Self-Power · Fail Safe · Integrated Instantaneous Contact · 10 ea Fault Recording (Check Via Communication) · Last Fault's Waveform Recording (4 Cycles, Check Via Communication)	· L/S/I · Minute Current Adjustment · Thermal · Self-Power · Fail Safe · Communication (Modbus) · External Power · ZSI · Remote Reset Function · Individual Continuous Contact : LTD, STD/INST, PTA · 256 ea Fault Recording · Last Fault's Waveform Recording (4 Cycles, Check Via Communication) · 200 ea Event Recording (Check Via Communication)	· L/S/I · Thermal · Self-Power · Fail Safe · Communication (Modbus) · External Power · ZSI · Remote Reset Function · Individual Continuous Contact : LTD, STD/INST, PTA · 256 ea Fault Recording · Last Fault's Waveform Recording (4 Cycles, Check Via Communication) · 200 ea Event Recording (Check Via Communication) · Over-Voltage/Under-Voltage · Imbalance Type (Voltage/Current) · Reverse Power/Over-Power · 3 Phase Voltage/Current RMS/ Vector · Power (P, Q, S), Power Factor (3 Phase) · Energy (Normal/Reverse Direction) · Demand · Minute Current Adjustment at Long Time, Short time, Instantaneous, Ground Setting

Accessories

Over Current Relay (OCR)

Appearance and Setting Value

GPR-LN (50, 60)

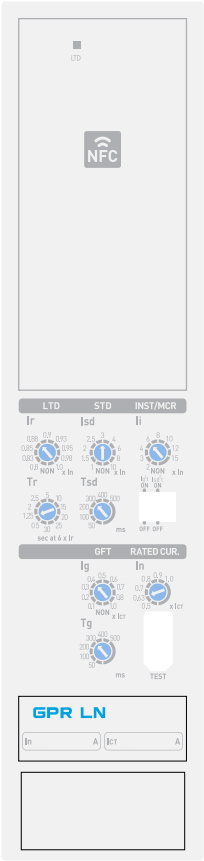

- **Overload Protection**
  - Long time delay
- **Short Circuit Protection**
  - Short time delay, instantaneous trip
  - I^2t On/Off optional (for STD)
- **Ground Fault Protection**
  - I^2t On/Off optional
- **Neutral Wire Protection**
  - 3P : No protection for neutral wire
  - 4P : 100 % × In
  - LTD, STD, INST protection
- **Self-Power**
- **Equipped with NFC Functions**
  - Incident information can be received to the mobile phone
  - Introduction of function and app installation method : Refer to Page 34
- **1a DO (Digital Output)**
  - Contact specification

Rating	Nominal Switching Capacity (Resistive Load)	5 A 277 VAC
	Max. Switching Power (Resistive Load)	1,385 VA
	Max. Switching Voltage	277 VAC
	Max. Switching Current	5 A
	Max. Switching Capacity (Reference Value)	100 mA 5 VDC

- **Protection Features**

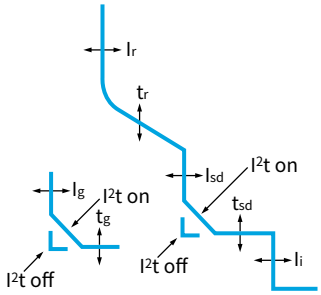

Protection Functions

LTD Protection	Current Setting (A)	In = Ict × ···		0.5	0.63	0.7	0.8	0.9	1				
		Ir = In × ···		0.8	0.83	0.85	0.88	0.9	0.93	0.95	0.98	1	Non
	Time Delay (sec) Accuracy : ± 15 % or Below 100 ms	tr @ (1.5 × Ir)		10.4	26.1	41.7	52	104	208	312	417	521	626
		tr @ (6.0 × Ir)		0.5	1.25	2	2.5	5	10	15	20	25	30
		tr @ (7.2 × Ir)		0.35	0.86	1.38	1.73	3.45	6.9	10.4	13.8	17.3	20.7
STD Protection	Current Setting (A) Accuracy : ± 15 %	Isd = In × ···		1	1.5	2	2.5	3	4	6	8	10	Non
	Time Delay (sec) @ 10 × In	tsd	I^2t Off	0.05	0.1	0.2	0.3	0.4	0.5				
			I^2t On	0.05	0.1	0.2	0.3	0.4	0.5				
		(I^2t Off)	Min. Trip Time (ms)	20	80	160	260	360	460				
			Max. Trip Time (ms)	80	140	240	340	440	540				
Instantaneous Protection	Current Setting (A)	Ii = In × ···		2	3	4	6	8	10	12	15	Non	
	Tripping Time			Below 50 ms									
Grounding Protection	Grounding Pick-Up Setting (A) Accuracy : ± 15 % (Ig > 0.4 In) ± 20 % (Ig ≤ 0.4 In)	Ig = Ict × ···		0.1	0.2	0.3	0.4	0.5	0.6	0.7	0.8	1	Non
	Time Delay (sec) @ 1 × Ict Accuracy : ± 20 %	tg	I^2t Off	0.05	0.1	0.2	0.3	0.4	0.5				
			I^2t On	0.05	0.1	0.2	0.3	0.4	0.5				
		(I^2t Off)	Min. Trip Time (ms)	20	80	160	260	360	460				
			Max. Trip Time (ms)	80	140	240	340	440	540				

GPR-LA (51, 61)

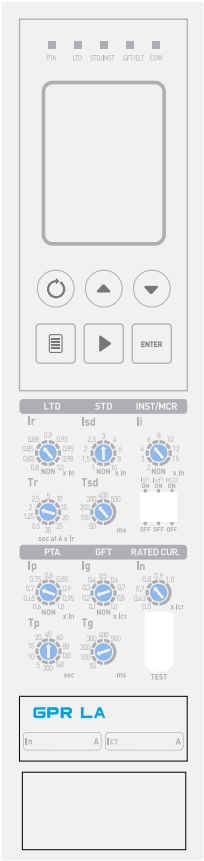

- **Overload Protection**
  - Long time delay
- **Short Circuit Protection**
  - Short time delay, instantaneous trip
  - I^2t On/Off optional (for STD)
- **Ground Fault Protection**
  - I^2t On/Off optional
- **Neutral Wire Protection**
  - 3 Pole : No protection
  - 4 Pole : Non, 50 %, 100 % (×Ir, Isd, Ii)
- **Measurement and Display**
  - 3 Phase current
- **Realization of Protective Coordination by ZSI (Zone Selective Interlocking)**
- **Fault Recording**
  - Records up to 256 fault information on fault type, fault phase, fault value, occurrence time of fault
- **Event Recording**
  - Records up to 200 events of devices, records changes in protection trip relay information
- **Pre-Trip Alarm**
  - Prevent unnecessary overload trip by setting according to rated current (In)
- **Field Test**
  - Simulation of long time, short time, instantaneous

- **RS-485 Communication/Modbus-RTU**
- **4a DO (Digital Output)**
  - Contact specification

Rating	Nominal Switching Capacity (Resistive Load)	5 A 277 VAC
	Max. Switching Power (Resistive Load)	1,385 VA
	Max. Switching Voltage	277 VAC
	Max. Switching Current	5 A
	Max. Switching Capacity (Reference Value)	100 mA 5 VDC

- **Protection Features**

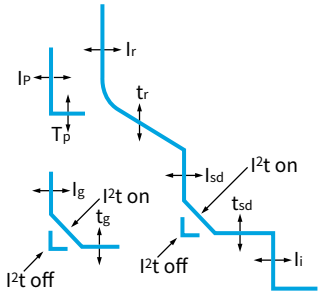

Protection Functions

LTD Protection	Current Setting (A)	In = Ict×···		0.5	0.63	0.7	0.8	0.9	1				
		Ir = In×···		0.8	0.83	0.85	0.88	0.9	0.93	0.95	0.98	1	Non
	Time Delay (sec) Accuracy : ± 15 % or Below 100 ms	tr @ (1.5×Ir)		10.4	26.1	41.7	52	104	208	312	417	521	626
		tr @ (6.0×Ir)		0.5	1.25	2	2.5	5	10	15	20	25	30
		tr @ (7.2×Ir)		0.35	0.86	1.38	1.73	3.45	6.9	10.4	13.8	17.3	20.7
STD Protection	Current Setting (A) Accuracy : ± 15 %	Isd = In×···		1	1.5	2	2.5	3	4	6	8	10	Non
	Time Delay (sec) @ 10×In	tsd	I^2t Off	0.05	0.1	0.2	0.3	0.4	0.5				
			I^2t On	0.05	0.1	0.2	0.3	0.4	0.5				
		(I^2t Off)	Min. Trip Time (ms)	20	80	160	260	360	460				
			Max. Trip Time (ms)	80	140	240	340	440	540				
Instantaneous Protection	Current Setting (A)	Ii = In×···		2	3	4	6	8	10	12	15	Non	
	Tripping Time			Below 50 ms									
Grounding Protection	Grounding Pick-Up Setting (A) Accuracy : ± 15 % (Ig>0.4 In) ± 20 % (Ig≤0.4 In)	Ig = Ict×···		0.1	0.2	0.3	0.4	0.5	0.6	0.7	0.8	1	Non
	Time Delay (sec) @ 1×Ict Accuracy : ± 20 %	tg	I^2t Off	0.05	0.1	0.2	0.3	0.4	0.5				
			I^2t On	0.05	0.1	0.2	0.3	0.4	0.5				
		(I^2t Off)	Min. Trip Time (ms)	20	80	160	260	360	460				
			Max. Trip Time (ms)	80	140	240	340	440	540				
Pre-Alarm	Current Setting (A) Accuracy : ± 15 %	Ip = In×···		0.6	0.65	0.7	0.75	0.8	0.85	0.9	0.95	1	Non
	Time Delay (sec)	tp		5	10	15	20	40	60	80	120	160	

Accessories

Over Current Relay (OCR)

Appearance and Setting Value

GPR-LAG (52, 62)

- **Overload Protection**
  - Long time delay
  - Thermal operation
- **Short Circuit Protection**
  - Short time delay, instantaneous trip
  - I^2t On/Off optional (for STD)
- **Earth Leakage Protection**
  - Uses ZCT for 5 A output at secondary (used within 3 %)
  - GPR setting is calculated based on 5 A at secondary
    Ex) When using 100 : 5 A, in order for primary to function at 30 A, 30×5/100 = 1.5 A, GPR is set to 2 A
- **Neutral Wire Protection**
  - 3 Pole : No protection
  - 4 Pole : Non, 50 %, 100 % (×Ir, Isd, Ii)
- **Measurement and Display**
  - 3 Phase current
- **Realization of Protective Coordination by ZSI (Zone Selective Interlocking)**
- **Fault Recording**
  - Records up to 256 fault information on fault type, fault phase, fault value, occurrence time of fault
- **Event Recording**
  - Records up to 200 events of devices, records changes in protection trip relay information
- **Pre-Trip Alarm**
  - Prevent unnecessary overload trip by setting according to rated current (In)
- **Field Test**
  - Simulation of long time, short time, instantaneous
- **RS-485 Communication/Modbus-RTU**
- **4a DO (Digital Output)**
  - Contact specification

Rating	Nominal Switching Capacity (Resistive Load)	5 A 277 VAC
	Max. Switching Power (Resistive Load)	1,385 VA
	Max. Switching Voltage	277 VAC
	Max. Switching Current	5 A
	Max. Switching Capacity (Reference Value)	100 mA 5 VDC

- **Protection Features**

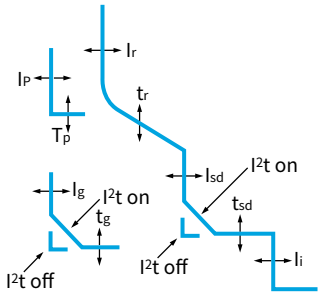

Protection Functions

LTD Protection	Current Setting (A)	In = Ict×···		0.5	0.63	0.7	0.8	0.9	1				
		Ir = In×···		0.8	0.83	0.85	0.88	0.9	0.93	0.95	0.98	1	Non
	Time Delay (sec) Accuracy : ± 15 % or Below 100 ms	tr @ (1.5×Ir)		10.4	26.1	41.7	52	104	208	312	417	521	626
		tr @ (6.0×Ir)		0.5	1.25	2	2.5	5	10	15	20	25	30
		tr @ (7.2×Ir)		0.35	0.86	1.38	1.73	3.45	6.9	10.4	13.8	17.3	20.7
STD Protection	Current Setting (A) Accuracy : ± 15 %	Isd = In×···		1	1.5	2	2.5	3	4	6	8	10	Non
	Time Delay (sec) @ 10×In	tsd	I^2t Off	0.05	0.1	0.2	0.3	0.4	0.5				
			I^2t On	0.05	0.1	0.2	0.3	0.4	0.5				
		(I^2t Off)	Min. Trip Time (ms)	20	80	160	260	360	460				
			Max. Trip Time (ms)	80	140	240	340	440	540				
Instantaneous Protection	Current Setting (A)	Ii = In×···		2	3	4	6	8	10	12	15	Non	
	Tripping Time			Below 50 ms									
Pre-Alarm	Current Setting (A) Accuracy : ± 15 %	Ip = In×···		0.6	0.65	0.7	0.75	0.8	0.85	0.9	0.95	1	Non
	Time Delay (sec)	tp		5	10	15	20	40	60	80	120	160	200
Leakage Protection	Current Setting (A)	I△n		0.5	0.8	1	2	3	5	Non			
	Time Delay (ms) Accuracy : ± 15 % or Above 40 ms	△t	Alarm Time (ms)	140	230	350	800	950					
			Trip Time (ms)	60	140	230	350	800					

GPR-LAZ (53, 63)

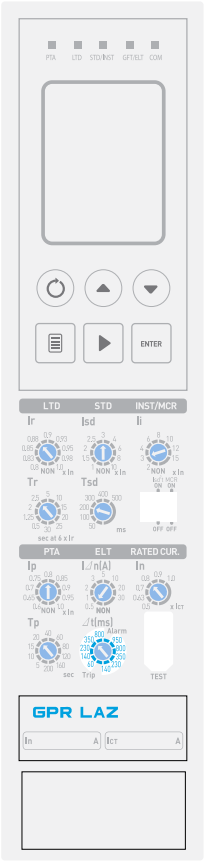

- **Overload Protection**
  - Long time delay
  - Thermal operation
- **Short Circuit Protection**
  - Short time delay, instantaneous trip
  - I^2t On/Off optional (for STD)
- **Earth Leakage Protection**
  - Uses our company's supply of 1,000 : 1 ZCT
  - GPR's operation setting is set based on the primary
- **Neutral Wire Protection**
  - 3 Pole : No protection
  - 4 Pole : Non, 50 %, 100 % (×Ir, Isd, Ii)
- **Measurement and Display**
  - 3 Phase current
- **Realization of Protective Coordination by ZSI (Zone Selective Interlocking)**
- **Fault Recording**
  - Records up to 256 fault information on fault type, fault phase, fault value, occurrence time of fault
- **Event Recording**
  - Records up to 200 events of devices, records changes in protection trip relay information
- **Pre-Trip Alarm**
  - Prevent unnecessary overload trip by setting according to rated current (In)
- **RS-485 Communication/Modbus-RTU**

- **Field Test**
  - Simulation of long time, short time, instantaneous
- **4a DO (Digital Output)**
  - Contact specification

Rating	Nominal Switching Capacity (Resistive Load)	5 A 277 VAC
	Max. Switching Power (Resistive Load)	1,385 VA
	Max. Switching Voltage	277 VAC
	Max. Switching Current	5 A
	Max. Switching Capacity (Reference Value)	100 mA 5 VDC

- **Protection Features**

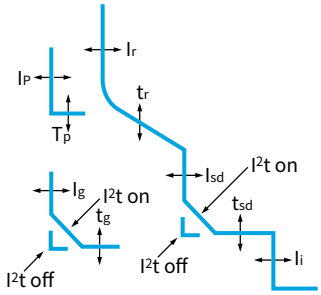

Protection Functions

LTD Protection	Current Setting (A)	In = Ict×···		0.5	0.63	0.7	0.8	0.9	1				
		Ir = In×···		0.8	0.83	0.85	0.88	0.9	0.93	0.95	0.98	1	Non
	Time Delay (sec) Accuracy : ± 15 % or Below 100 ms	tr @ (1.5×Ir)		10.4	26.1	41.7	52	104	208	312	417	521	626
		tr @ (6.0×Ir)		0.5	1.25	2	2.5	5	10	15	20	25	30
		tr @ (7.2×Ir)		0.35	0.86	1.38	1.73	3.45	6.9	10.4	13.8	17.3	20.7
STD Protection	Current Setting (A) Accuracy : ± 15 %	Isd = In×···		1	1.5	2	2.5	3	4	6	8	10	Non
	Time Delay (sec) @ 10×In	tsd	I^2t Off	0.05	0.1	0.2	0.3	0.4	0.5				
			I^2t On	0.05	0.1	0.2	0.3	0.4	0.5				
		(I^2t Off)	Min. Trip Time (ms)	20	80	160	260	360	460				
			Max. Trip Time (ms)	80	140	240	340	440	540				
Instantaneous Protection	Current Setting (A)	Ii = In×···		2	3	4	6	8	10	12	15	Non	
	Tripping Time			Below 50 ms									
Pre-Alarm	Current Setting (A) Accuracy : ± 15 %	Ip = In×···		0.6	0.65	0.7	0.75	0.8	0.85	0.9	0.95	1	Non
	Time Delay (sec)	tp		5	10	15	20	40	60	80	120	160	200
Leakage Protection	Current Setting (A)	I△n		0.5	1	2	3	5	10	20	30	Non	
	Time Delay (ms) Accuracy : ± 15 % or Above 40 ms	△t	Alarm Time (ms)	140	230	350	800	950					
			Trip Time (ms)	60	140	230	350	800					

Accessories

Over Current Relay (OCR)

Appearance and Setting Value

GPR-LP (54, 64) / GPR-LH (55, 65)

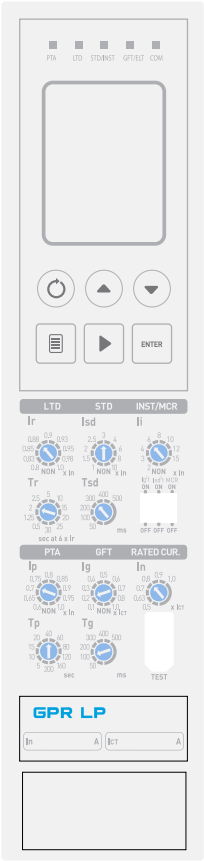

- **Overload Protection**
  - Long time delay
  - Thermal operation
- **Short Circuit Protection**
  - Short time delay, instantaneous trip
  - I^2t On/Off optional (for STD)
- **Ground Fault Protection**
  - I^2t On/Off optional
- **Neutral Wire Protection**
  - 3 Pole : No protection
  - 4 Pole : Non, 50 %, 100 % (×Ir, Isd, Ii)
- **Over-Voltage/Under-Voltage/Imbalance Protection**
- **Measurement and Display**
  - 3 Phase current/voltage/power/power factor/power quantity/phase/demand
- **Realization of Protective Coordination by ZSI (Zone Selective Interlocking)**
- **Fault Recording**
  - Records up to 256 fault information on fault type, fault phase, fault value, occurrence time of fault
- **Event Recording**
  - Records up to 256 events of devices, records changes in protection trip relay information
- **Pre-Trip Alarm**
  - Prevent unnecessary overload trip by setting according to rated current (In)
- **Field Test**
  - Simulation of long time, short time, instantaneous

- **RS-485 Communication/Modbus-RTU**
- **Need to Connect Voltage Module for Voltage Measurement**
- **Additional Function in LH Type**
- **Voltage/Current Harmonics (1 st ~ 63 th)**
  - 3 phase waveform
  - TDH, TDD
- **4a DO (Digital Output)**
  - Contact specification

Rating	Nominal Switching Capacity (Resistive Load)	5 A 277 VAC
	Max. Switching Power (Resistive Load)	1,385 VA
	Max. Switching Voltage	277 VAC
	Max. Switching Current	5 A
	Max. Switching Capacity (Reference Value)	100 mA 5 VDC

- **Protection Features**

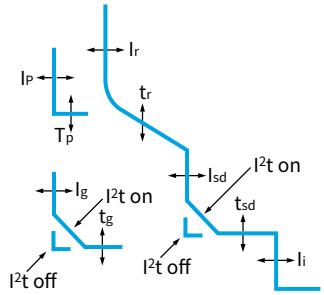

Protection Functions

LTD Protection	Current Setting (A)	In = Ict×···		0.5	0.63	0.7	0.8	0.9	1				
		Ir = In×···		0.8	0.83	0.85	0.88	0.9	0.93	0.95	0.98	1	Non
	Time Delay (sec) Accuracy : ± 15 % or Below 100 ms	tr @ (1.5×Ir)		10.4	26.1	41.7	52	104	208	312	417	521	626
		tr @ (6.0×Ir)		0.5	1.25	2	2.5	5	10	15	20	25	30
		tr @ (7.2×Ir)		0.35	0.86	1.38	1.73	3.45	6.9	10.4	13.8	17.3	20.7
STD Protection	Current Setting (A) Accuracy : ± 15 %	Isd = In×···		1	1.5	2	2.5	3	4	6	8	10	Non
	Time Delay (sec) @ 10×In	tsd	I^2t Off	0.05	0.1	0.2	0.3	0.4	0.5				
			I^2t On	0.05	0.1	0.2	0.3	0.4	0.5				
		(I^2t Off)	Min. Trip Time (ms)	20	80	160	260	360	460				
			Max. Trip Time (ms)	80	140	240	340	440	540				
Instantaneous Protection	Current Setting (A)	Ii = In×···		2	3	4	6	8	10	12	15	Non	
	Tripping Time			Below 50 ms									
Grounding Protection	Ground Pick-Up Setting (A) Accuracy : ± 15 % (Ig>0.4 In) ± 20 % (Ig≤0.4 In)	Ig = Ict×···		0.1	0.2	0.3	0.4	0.5	0.6	0.7	0.8	1	Non
	Time Delay (sec) @ 1×Ict Accuracy : ± 20 %	tg	I^2t Off	0.05	0.1	0.2	0.3	0.4	0.5				
			I^2t On	0.05	0.1	0.2	0.3	0.4	0.5				
		(I^2t Off)	Min. Trip Time (ms)	20	80	160	260	360	460				
			Max. Trip Time (ms)	80	140	240	340	440	540				
Pre-Alarm	Current Setting (A) Accuracy : ± 15 %	Ip = In×···		0.6	0.65	0.7	0.75	0.8	0.85	0.9	0.95	1	Non
	Time Delay (sec)	tp		5	10	15	20	40	60	80	120	160	200

GPR-SN (57, 67)

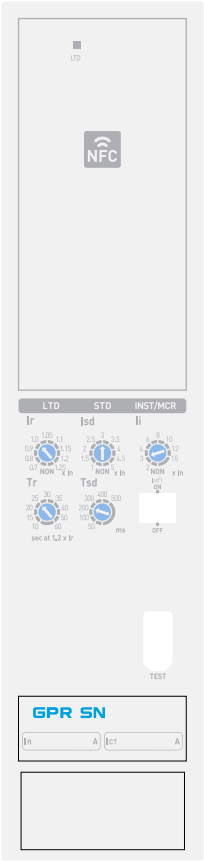

- **Overload Protection**
  - Long time delay
- **Short Circuit Protection**
  - Short time delay, instantaneous trip
  - I^2t On/Off optional (for STD)
- **Self-Power**
- **Equipped with NFC Functions**
  - Incident information can be received to the mobile phone
  - Introduction of function and app installation method : Refer to Page 34
- **1a DO (Digital Output)**
  - Contact specification

Rating	Nominal Switching Capacity (Resistive Load)	5 A 277 VAC
	Max. Switching Power (Resistive Load)	1,385 VA
	Max. Switching Voltage	277 VAC
	Max. Switching Current	5 A
	Max. Switching Capacity (Reference Value)	100 mA 5 VDC

- **Protection Features**

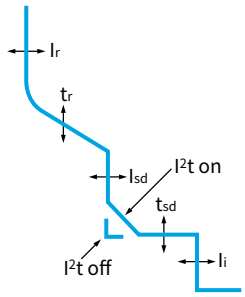

Protection Functions

LTD Protection	Current Setting (A)	In = Ict × ···		(0.5 ~ 1.0) ✻1 % Unit or 1 A Unit									
		Ir = In × ···		0.7	0.8	0.9	1	1.05	1.1	1.15	1.2	1.25	Non
	Time Delay (sec) Accuracy : ± 15 % or Below 100 ms	tr @ (1.05 × Ir)		20	30	40	50	60	70	80	100	120	
		tr @ (1.2 × Ir)		10	15	20	25	30	35	40	50	60	
		tr @ (3 × Ir)		0.99	1.49	1.99	2.48	2.98	3.48	3.97	4.97	5.96	
STD Protection	Current Setting (A) Accuracy : ± 15 %	Isd = In × ···		1	1.5	2	2.5	3	3.5	4	4.5	5	Non
	Time Delay (sec) @ 5 × In	tsd	I^2t Off	0.05	0.1	0.2	0.3	0.4	0.5				
			I^2t On	0.05	0.1	0.2	0.3	0.4	0.5				
		(I^2t Off)	Min. Trip Time (ms)	20	80	160	260	360	460				
			Max. Trip Time (ms)	80	140	240	340	440	540				
Instantaneous Protection	Current Setting (A)	Ii = In × ···		2	3	4	6	8	10	12	15	Non	
	Tripping Time			Below 50 ms									

Accessories

Over Current Relay (OCR)

Appearance and Setting Value

GPR-SA (58, 68)

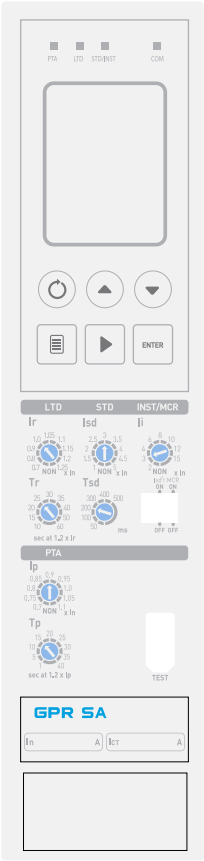

- **Overload Protection**
  - Long time delay
- **Short Circuit Protection**
  - Short time delay, instantaneous trip
  - I^2t On/Off optional (for STD)
- **In Setting with Minute Adjustment**
  - Adjusts in 1 A unit within the range of 0.5 ~ 1 Ict
  - Adjusted using button in the LCD setting screen
- **Realization of Protective Coordination by ZSI (Zone Selective Interlocking)**
- **Fault Recording**
  - Records up to 256 fault information on fault type, fault phase, fault value, occurrence time of fault
- **Event Recording**
  - Records up to 200 events of devices, records changes in protection trip relay information
- **Pre-Trip Alarm**
  - Prevent unnecessary overload trip by setting according to rated current (In)
- **Field Test**
  - Simulation of long time, short time, instantaneous
- **RS-485 Communication/Modbus-RTU**

- **3a DO (Digital Output)**
  - Contact specification

Rating	Nominal Switching Capacity (Resistive Load)	5 A 277 VAC
	Max. Switching Power (Resistive Load)	1,385 VA
	Max. Switching Voltage	277 VAC
	Max. Switching Current	5 A
	Max. Switching Capacity (Reference Value)	100 mA 5 VDC

- **Protection Features**

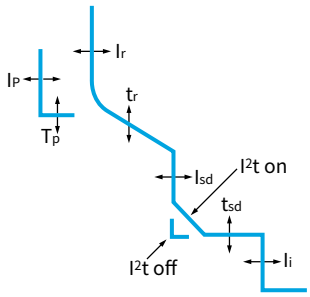

Protection Functions

LTD Protection	Current Setting (A)	In = Ict×···		(0.5 ~ 1.0) ⁎1 % Unit or 1 Unit									
		Ir = In×···		0.7	0.8	0.9	1	1.05	1.1	1.15	1.2	1.25	Non
	Time Delay (sec) Accuracy : ± 15 % or Below 100 ms	tr @ (1.05×Ir)		20	30	40	50	60	70	80	100	120	
		tr @ (1.2×Ir)		10	15	20	25	30	35	40	50	60	
		tr @ (3×Ir)		0.99	1.49	1.99	2.48	2.98	3.48	3.97	4.97	5.96	
STD Protection	Current Setting (A) Accuracy : ± 15 %	Isd = In×···		1	1.5	2	2.5	3	3.5	4	4.5	5	Non
	Time Delay (sec) @ 5×In	tsd	I^2t Off	0.05	0.1	0.2	0.3	0.4	0.5				
			I^2t On	0.05	0.1	0.2	0.3	0.4	0.5				
		(I^2t Off)	Min. Trip Time (ms)	20	80	160	260	360	460				
			Max. Trip Time (ms)	80	140	240	340	440	540				
Instantaneous Protection	Current Setting (A)	Ii = In×···		2	3	4	6	8	10	12	15	Non	
	Tripping Time			Below 50 ms									
Pre-Alarm	Current Setting (A) Accuracy : ± 15 %	Ip = In×···		0.7	0.75	0.8	0.85	0.9	0.95	1	1.05	1.1	Non
	Time Delay (sec)	tp @ (Ip×1.2)		1	5	10	15	20	25	30	35	40	

GPR-SP (59, 69)

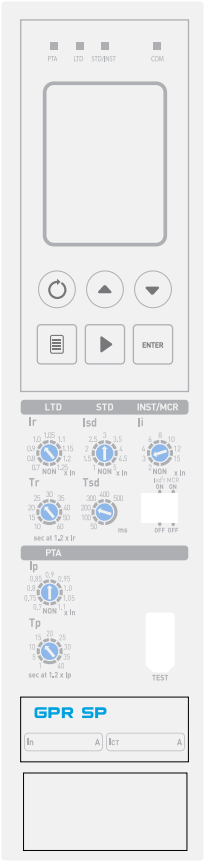

- **Overload Protection**
  - Long time delay
- **Short Circuit Protection**
  - Short time delay, instantaneous trip
  - I^2t On/Off optional (for STD)
- **Neutral Wire Protection**
  - 3 Pole : No protection
  - 4 Pole : Non, 50 %, 100 % (× Ir, Isd, Ii)
- **Over-Voltage/Under-Voltage/Imbalance Protection**
- **Measurement and Display**
  - 3 Phase current/voltage/power/power factor/power quantity/phase/demand
- **Realization of Protective Coordination by ZSI (Zone Selective Interlocking)**
- **Fault Recording**
  - Records up to 256 fault information on fault type, fault phase, fault value, occurrence time of fault
- **Event Recording**
  - Records up to 200 events of devices, records changes in protection trip relay information
- **Pre-Trip Alarm**
  - Prevent unnecessary overload trip by setting according to rated current (In)
- **Field Test**
  - Simulation of long time, short time, instantaneous
- **RS-485 Communication/Modbus-RTU**
- **Need to Connect Voltage Module for Voltage Measurement**
- **3a DO (Digital Output)**
  - Contact specification

Rating	Nominal Switching Capacity (Resistive Load)	5 A 277 VAC
	Max. Switching Power (Resistive Load)	1,385 VA
	Max. Switching Voltage	277 VAC
	Max. Switching Current	5 A
	Max. Switching Capacity (Reference Value)	100 mA 5 VDC

- **Protection Features**

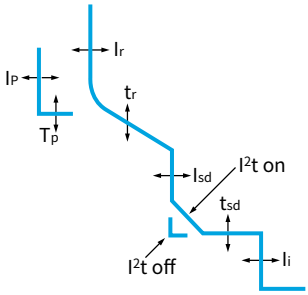

Protection Functions

STD Protection	Current Setting (A)	In = Ict×···		0.5	0.63	0.7	0.8	0.9	1				
		Ir = In×···		0.8	0.83	0.85	0.88	0.9	0.93	0.95	0.98	1	Non
	Time Delay (sec) Accuracy : ± 15 % or Below 100 ms	tr @ (1.05×Ir)		10.4	26.1	41.7	52	104	208	312	417	521	626
		tr @ (1.2×Ir)		0.5	1.25	2	2.5	5	10	15	20	25	30
		tr @ (3×Ir)		0.35	0.86	1.38	1.73	3.45	6.9	10.4	13.8	17.3	20.7
STD Protection	Current Setting (A) Accuracy : ± 15 %	Isd = In×···		1	1.5	2	2.5	3	4	6	8	10	Non
	Time Delay (sec) @ 5×In	tsd	I^2t Off	0.05	0.1	0.2	0.3	0.4	0.5				
			I^2t On	0.05	0.1	0.2	0.3	0.4	0.5				
		(I^2t Off)	Min. Trip Time (ms)	20	80	160	260	360	460				
			Max. Trip Time (ms)	80	140	240	340	440	540				
Instantaneous Protection	Current Setting (A)	Ii = In×···		2	3	4	6	8	10	12	15	Non	
	Tripping Time			Below 50 ms									
Pre-Alarm	Current Setting (A) Accuracy : ± 15 %	Ip = In×···		0.6	0.65	0.7	0.75	0.8	0.85	0.9	0.95	1	Non
	Time Delay (sec)	tp @ (Ip×1.2)		5	10	15	20	40	60	80	120	160	

Accessories

Over Current Relay (OCR)

Operation Characteristics

Long Time Delay (LTD)

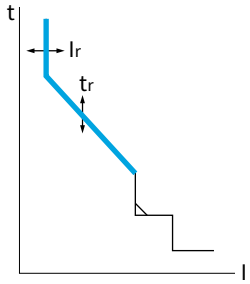

Standard Current Setting

- **L Type**
  - The scale marks the magnification of [In].
  - The setting range of current is a 10-step method of Non, 0.8, 0.83, 0.85, 0.88, 0.9, 0.93, 0.95, 0.98 and 1.0×[In].
  - No protection in case the [Ir] is set as [Non].
  - The breaker does not trip below 105 % of [Ir] and trips at 120 % of [Ir] and above.
- **S Type**
  - The setting range of current is a 10-step method of Non, 0.7, 0.8, 0.9, 1.0, 1.05, 1.1, 1.15, 1.2, 1.25×[In].
  - The breaker trips at 100 % of [Ir] setting value and above.

Time Delay Setting

- **L Type**
  - The scale is the second of operating time based on 600 %×[Ir] with inverse time operation.
  - The setting range of current is a 10-step method of 0.5, 1.25, 2, 2.5, 5, 10, 15, 20, 25, 30 sec.
  - The breaker trips at ±15 % of setting time.
- **S Type**
  - The setting range is a 9-step method of 10, 15, 20, 25, 30, 35, 40, 50, 60 sec.
  - The scale is the second of operating time based on 120 %×[Ir] with inverse time operation.

Short Time Delay (STD)

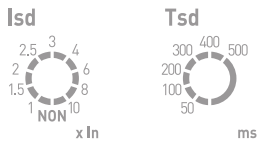

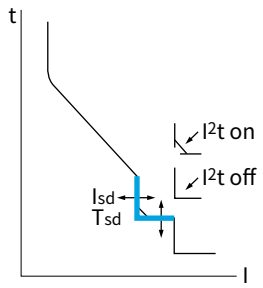

Standard Current Setting

- **L Type**
  - The scale marks the magnification of [In].
  - The setting range of current is a 10-step method of Non, 1, 1.5, 2, 2.5, 3, 4, 6, 8, 10×[In].
- **S Type**
  - The scale marks the magnification of [In].
  - The setting range of current is a 10-step method of Non, 1, 1.5, 2, 2.5, 3, 3.5, 4, 4.5, 5×[In].

Time delay setting

- **L Type**
  - The marking indicates the relay operation based on the time of 110 % of [Isd] in msec with definite time operation.
  - The setting range is a 6-step method of 50, 100, 200, 300, 400, 500 msec.
  - 1,000 % of inverse time curve is applied in case of I^2t on setting.
- **S Type**
  - The marking indicates the relay operation based on the time of 110 % of [Isd] in msec with definite time operation.
  - The setting range is a 6-step method of 50, 100, 200, 300, 400, 500 msec.
  - 500 % of inverse time curve is applied in case of I^2t on setting.

Instantaneous (INST)

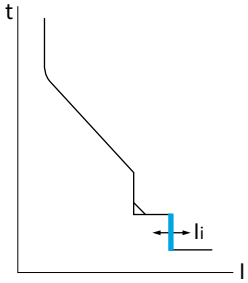

Standard Current Setting

- The scale marks the magnification of [In].
- The setting range of current is a 9-step method of Non, 2, 3, 4, 6, 8, 10, 12, 15×[In].
- No protection in case [Ii] is set as [Non], the protection does not function.

Time Delay Setting

- Total breaking time is below 50 ms.

Ground Fault Trip (GFT)

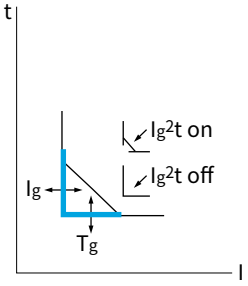

Standard Current Setting

- **L Type**
  - The numbers indicate scale for the 1 st currnet of OCR [Ict].
  - The setting range of current is a 10-step method of Non, 0.1, 0.2, 0.3, 0.4, 0.5, 0.6, 0.7, 0.8, 1.0×[Ict].

Time Delay Setting

- **L Type**
  - The marking indicates the relay operation based on the time of 120 % of [Ig] in msec with definite time operation.
  - The setting range is a 6-step method of 50, 100, 200, 300, 400, 500 msec.
  - It functions in case of 100 % Ict of inverse time in case of Ig^2t on setting.

Accessories

Over Current Relay (OCR)

Operation Characteristics

Earth Leakege Trip (ELT)

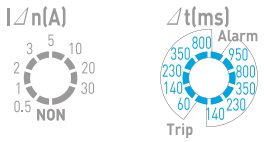

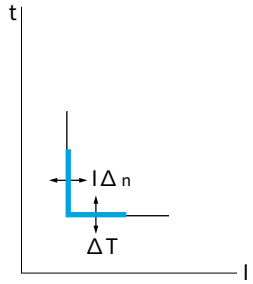

Standard Current Setting

- **GPR LAZ**
  - The scale marks the magnification of UPR rated primary current [ZCT].
  - The setting range of current is a 9-step method of Non, 0.5, 1, 2, 3, 5, 10, 20, 30×[A].
- **GPR LAG**
  - The scale is based on 5 A ZCT at secondary.
  - The setting range of current is a 7-step method of Non, 0.5, 0.8, 1, 2, 3, 5.

Time Delay Setting

- **L Type**
  - Once the primary value that has been set flows as much as the delayed time, it is set as both alarm and trip mode.
  - The setting range of alarm is a 5-step method of 140, 230, 350, 800, 950 msec.
  - The setting range of trip is a 5-step method of 60, 140, 230, 350, 800 msec.

Pre-Trip Alram (PTA)

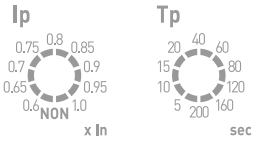

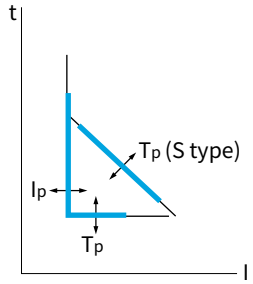

Standard Current Setting

- **L Type**
  - The scale marks the magnification of [In] with inverse time operation.
  - The setting range of current is a 10-step method of Non, 0.6, 0.65, 0.7, 0.75, 0.8, 0.85, 0.9, 0.95, 1.0 of [In].
- **S Type**
  - The scale marks the magnification with regards to [Io] with inverse time operation.
  - The setting range of current is a 10-step method of Non, 0.7, 0.75, 0.8, 0.85, 0.9, 0.95, 1.0, 1.05, 1.1×[Io].

Time Delay Setting

- **L Type**
  - The marking indicates the relay operation based on the time of 100 % of [Ip] in sec.
  - The setting range of current is a 10-step method of 5, 10, 15, 20, 40, 60, 80, 120, 160, 200 sec.
- **S Type**
  - 9-step of 1, 5, 10, 15, 20, 25, 30, 35, 40 sec can be selected in 120 % of [Ip] and has operation characteristics at inverse time operation.

Characteristic Curve

General Feeder

❶ Long Time Delay Current Setting Range

❷ Short Time Delay Current Setting Range

❸ Instantaneous Tripping Current Setting Range

❹ Ground Fault Trip Current Setting Range

❺ Pre-Trip Alarm Current Setting Range

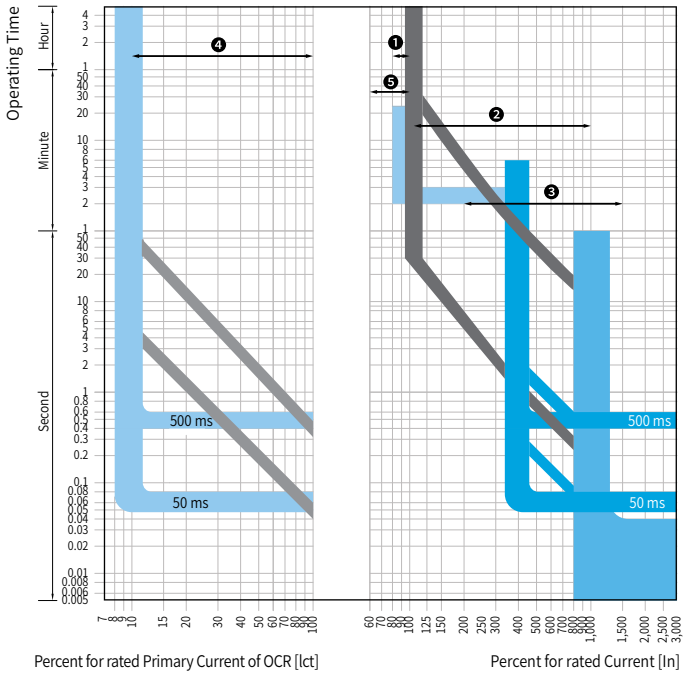

Generator

❶ Long Time Delay Current Setting Range

❷ Short Time Delay Current Setting Range

❸ Instantaneous Tripping Current Setting Range

❹ Pre-Trip Alarm Current Setting Range

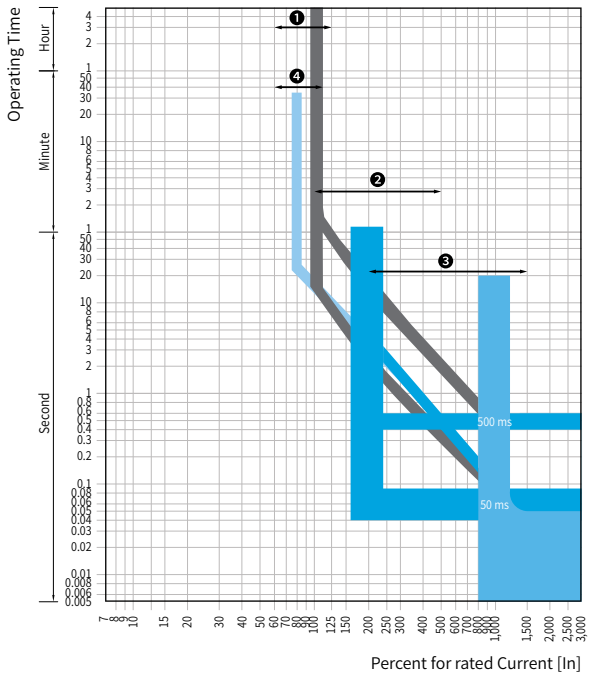

Accessories

Measurement

Dimension

Unit : mm

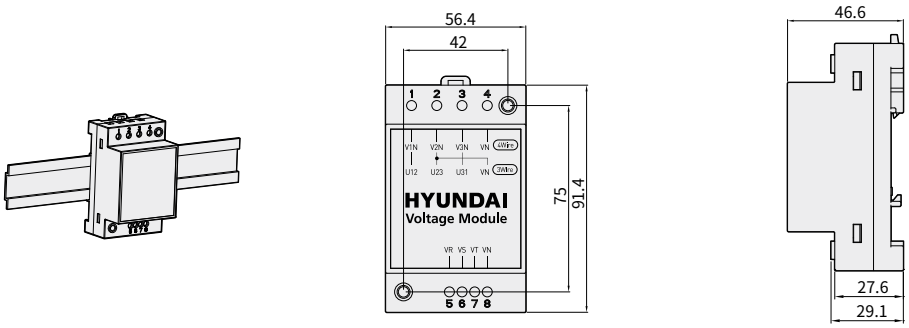

Voltage Module

GPR-LP/LH/SP Trip Relay has to be installed with a voltage module to measure the voltage.
Voltage Input Range : AC 69 ~ 690 V

Voltage Connection

Voltage Input Range : 69 ~ 690 V

※ The length of connecting cable of the voltage module and ACB's VR, VS, VT shall be installed within 150 mm.

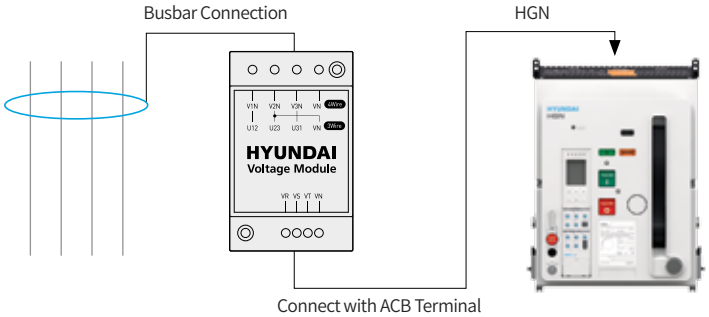

3P 3Wire

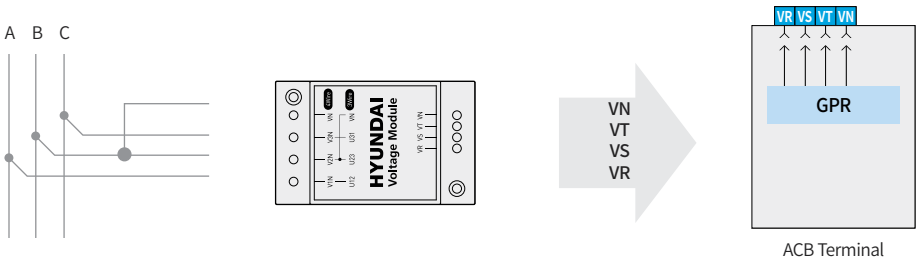

4P 4Wire / 3P 4Wire

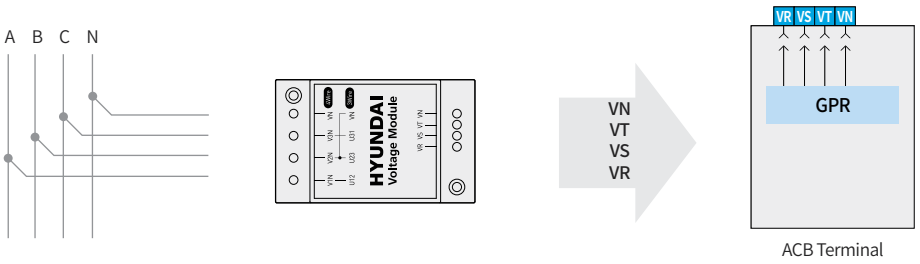

Zone Selective Interlocking

Zone Selective Interlocking System

Zone selective interlocking function involves the breaker in the fault sector detecting malfunction for selective protection coordination. The circuit breaker in the fault sector sends a lock signal to the back-up protection circuit breaker by force to delay the operation and the circuit breaker in the fault sector operates instantaneously to enable selective protection coordination of the system.

Examples

- First Fault Occurrence
  In case fault 1 occurs in selective zone (Zone 3), ACB 3-2 functions immediately and ACB 3-2 relay triggers a ZSI signal in ACB 2-1 relay to maintain a delay so that the circuit breaker does not function, preventing the expansion of fault region.
- Fault 2 Occurrence
  In case a fault occurs at the lower end of ACB 2-1, the circuit breaker in zone 3 region is unable to detect. Therefore, the relay of ACB 2-1 is unable to receive any signal from the lower end so, immediately, ACB 2-1 functions, triggering a ZSI signal to ACB 1 to prevent the expansion of fault range.

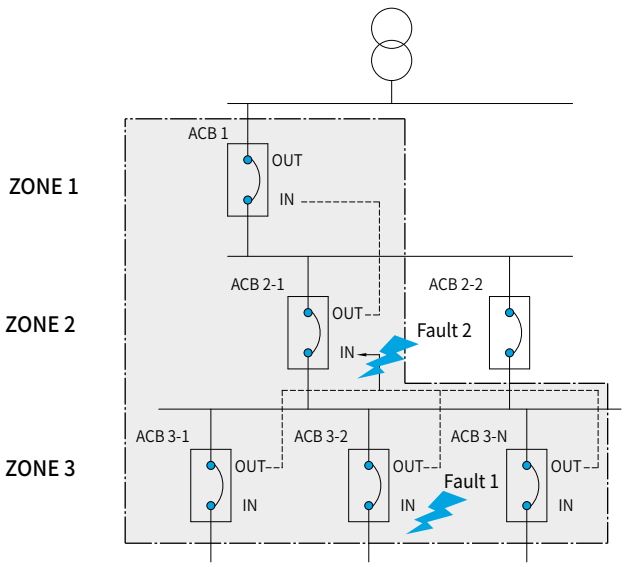

------- ZSI Connection

※ ZSI connection wire's maximum distance has to be constituted within 3 m.
ZSI function cannot be operated during self-power.
Upon the release of the product, ZSI function is not activated and the 2 terminals (31, 32) at the control power input area are short so please cut the wire before connection when using ZSI.

Accessories

Over Current Relay (OCR)

System Diagram

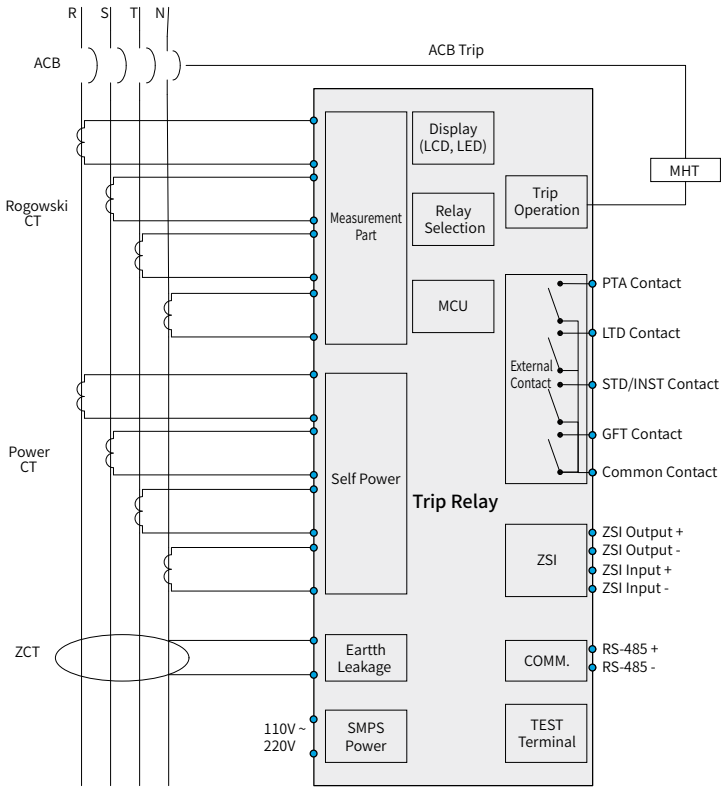

Communication Function

Modbus-RTU/RS-485

- Operation Mode : Differential
- Distance : Max. 1.2 km
- Cable : RS-485 Shielded Twist 2-Pair Cable
- Baud Rate : 9,600, 19,200, 38,400 bps
- Transmission Method : Half-Duplex
- Termination : 110 Ω

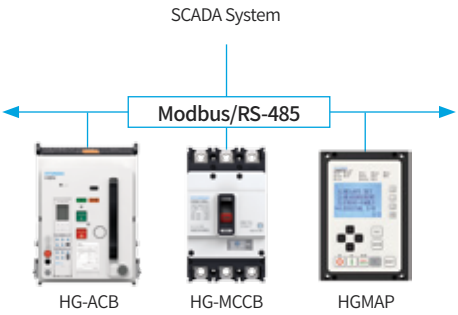

NFC Communication (Near Field Communication) * for Android™

- Various information related to the breaker's faults (cause of fault, current waveform at fault etc.) can be received conveniently through smart phones by using NFC wireless communication technology's Android application.
- Execute the application and receive the fault information by placing the smart phone's NFC antenna at the contact position indicated in the OCR.
- You can search the CF Fault Reader in Google Play™ for the application or download it for free by connecting to the QR code on the right.
- Up to 10 past faults worth of information is saved. (However, as for current's waveform information, only the recent fault is saved.)
- The information received can be sent to the e-mail through the application.

※ Android and Google Play are registered trademarks of Google Inc.

Circuit Diagrams

GPR-LN

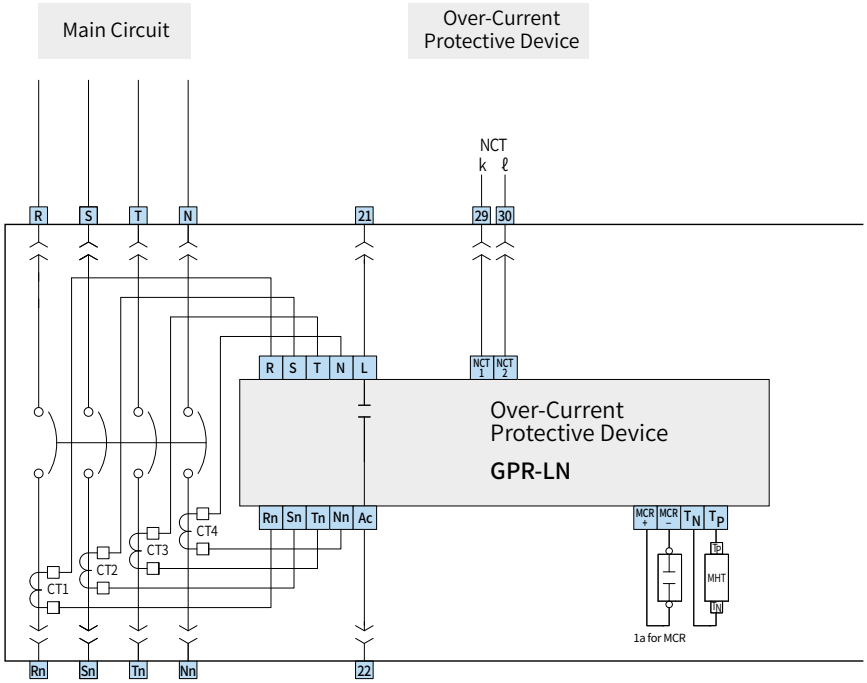

GPR-LA

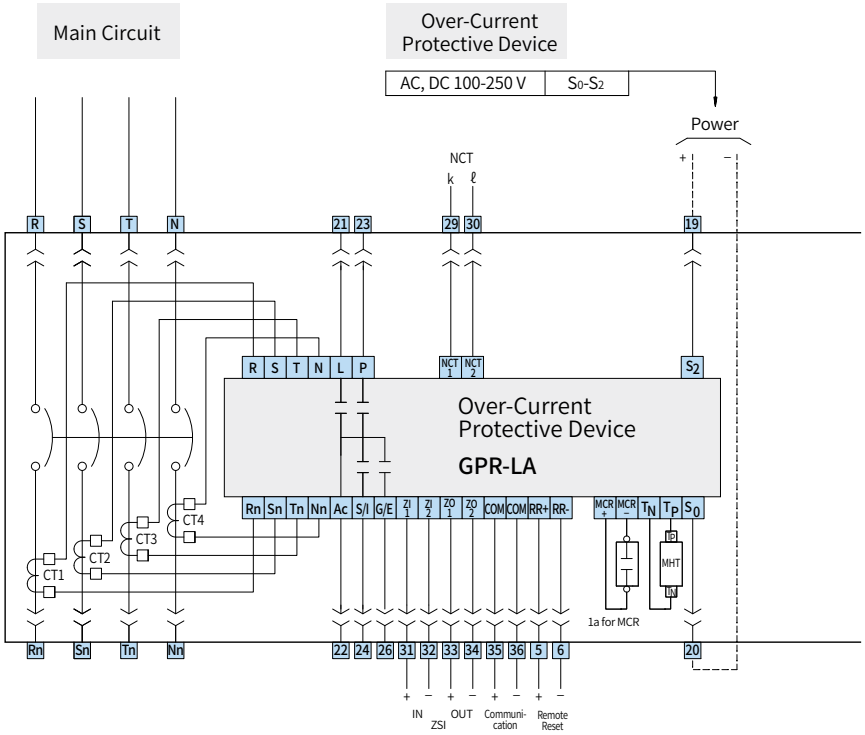

Accessories

Over Current Relay (OCR)

System Diagrams

GPR-LAG/LAZ

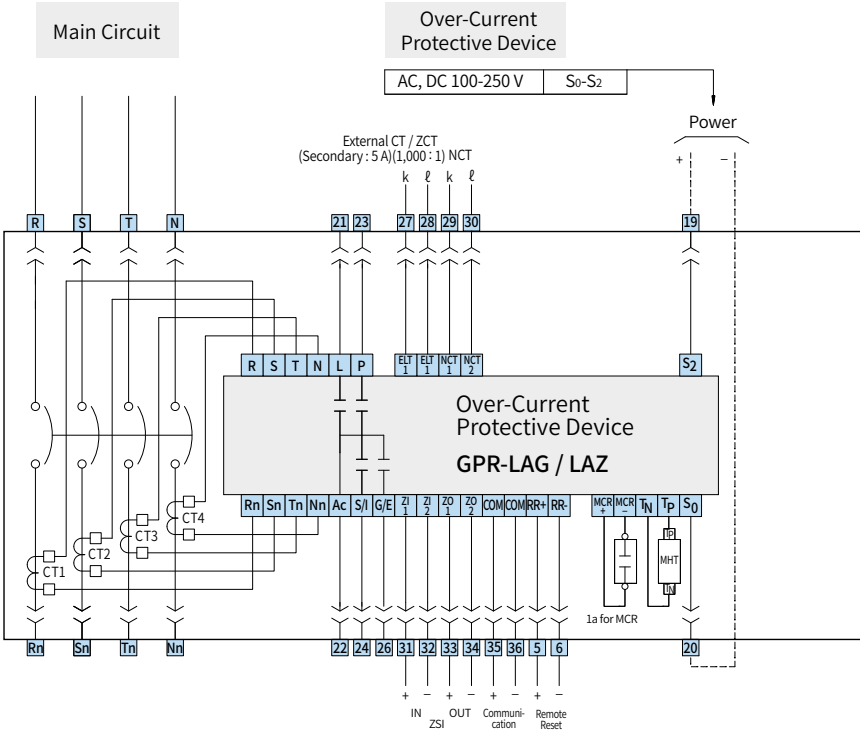

GPR-LP/LH

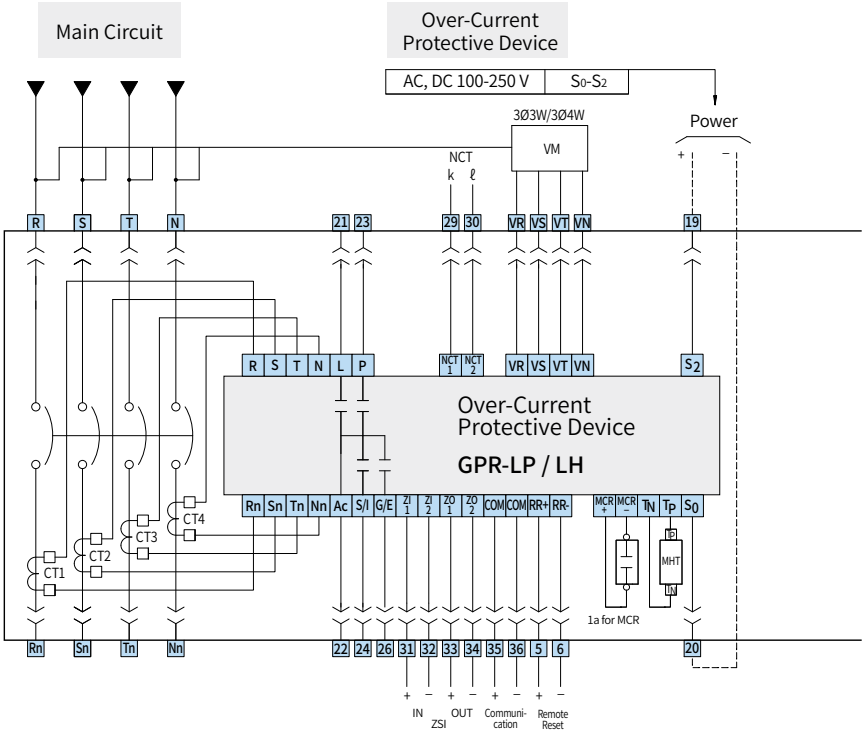

GPR-SN

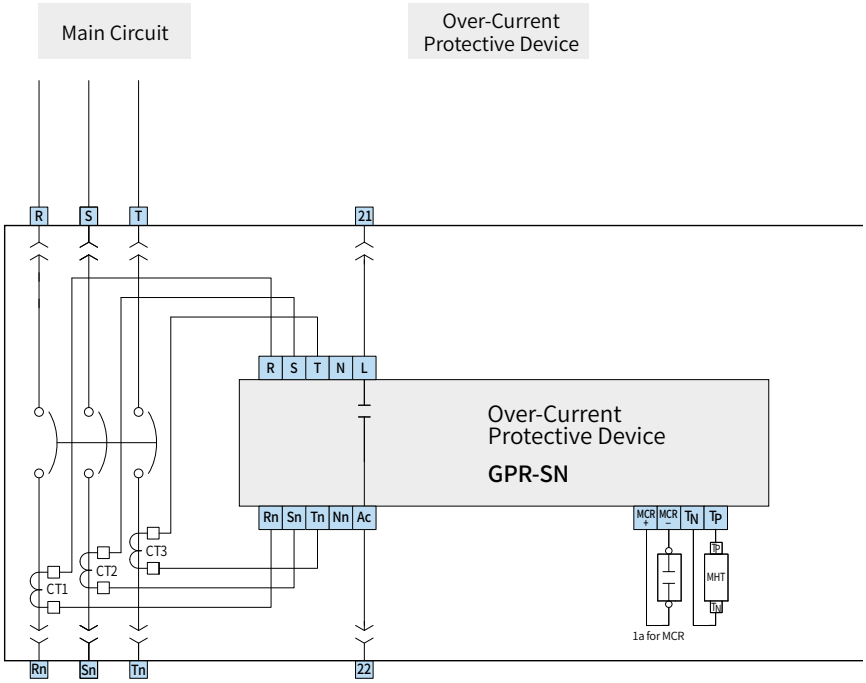
Main Circuit
Over-Current Protective Device
R
S
T
21
R S T N L
Over-Current Protective Device
GPR-SN
Rn Sn Tn Nn Ac
MCR + MCR − TN TP
CT1
CT2
CT3
MHT
1a for MCR
Rn
Sn
Tn
22

GPR-SA

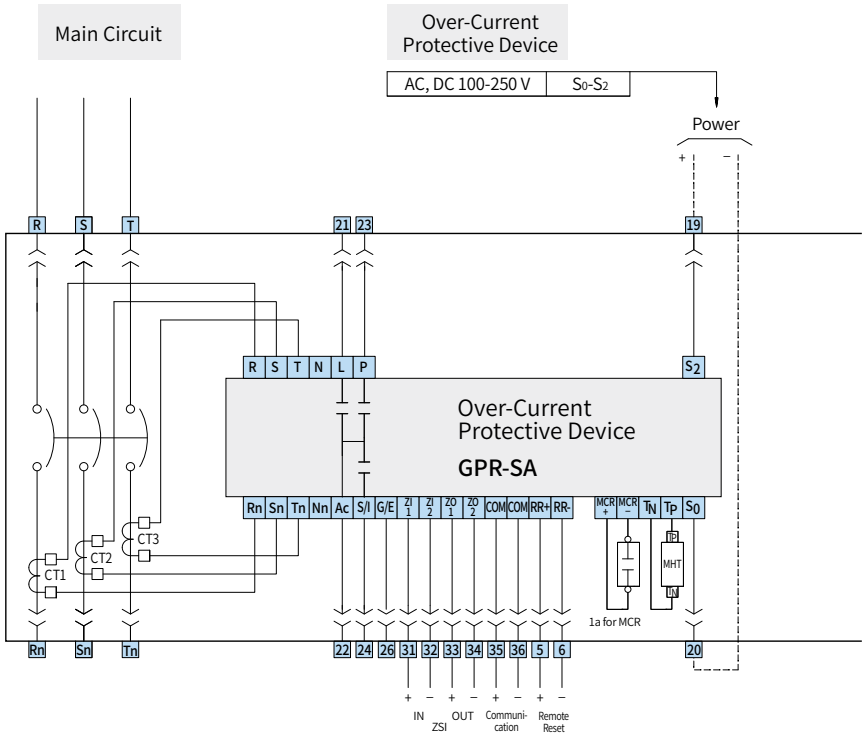
Main Circuit
Over-Current Protective Device
AC, DC 100-250 V
S0-S2
Power
+
−
R
S
T
21 23
19
R S T N L P
S2
Over-Current Protective Device
GPR-SA
Rn Sn Tn Nn Ac S/I G/E ZI 1 ZI 2 ZO 1 ZO 2 COM COM RR+ RR-
MCR + MCR − TN TP S0
CT1
CT2
CT3
MHT
1a for MCR
Rn
Sn
Tn
22 24 26 31 32 33 34 35 36 5 6
20
IN
ZSI
OUT
Communi-cation
Remote Reset

Accessories

Over Current Relay (OCR)

System Diagrams

GPR-SP

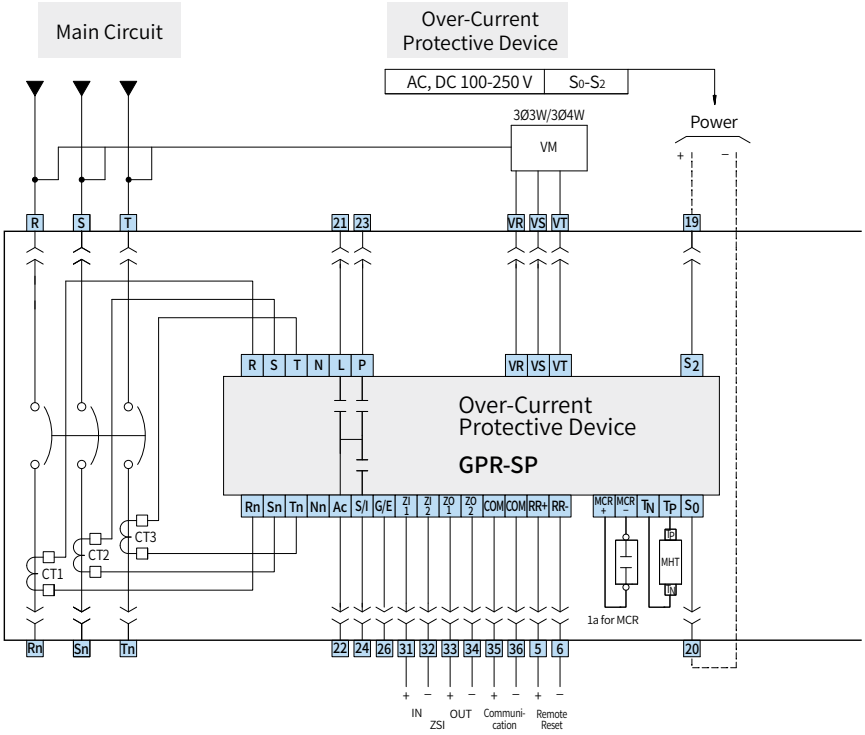

※ In case of No. 52 62 (GPR-LAG) 53-63 (GPR-LAZ), CT connecting wire 27, 28 must be within 5 m.
The connecting wire of Remote Reset (RR) No. 5 No. 6 circuit must be within 5 m.

Time Chart for LTD Inverse Time (General Feeder)

Item	x Ir \ Tr	LTD Time Setting (sec)									
		0.5	1.25	2	2.5	5	10	15	20	25	30
Overload Rate (%)	115	25.05	62.62	100.19	125.23	250.47	500.93	751.40	1,001.87	1,252.34	1,502.80
	120	21.04	52.61	84.17	105.22	210.43	420.87	631.30	841.74	1,052.17	1,262.61
	125	18.13	45.33	72.53	90.67	181.33	362.66	543.99	725.32	906.66	1,087.99
	130	15.90	39.75	63.60	79.50	158.99	317.99	476.98	635.97	794.96	953.96
	135	14.12	35.30	56.48	70.61	141.21	282.42	423.64	564.85	706.06	847.27
	140	12.67	31.67	50.67	63.34	126.69	253.37	380.06	506.74	633.43	760.11
	145	11.46	28.64	45.83	57.29	114.58	229.15	343.73	458.31	572.88	687.46
	150	10.43	26.08	41.73	52.16	104.33	208.65	312.98	417.30	521.63	625.95
	155	9.55	23.88	38.21	47.77	95.53	191.07	286.60	382.13	477.67	573.20
	160	8.79	21.98	35.17	43.96	87.91	175.83	263.74	351.65	439.57	527.48
	165	8.12	20.31	32.50	40.62	81.25	162.50	243.75	325.00	406.25	487.50
	170	7.54	18.84	30.15	37.69	75.38	150.75	226.13	301.50	376.88	452.25
	175	7.02	17.54	28.07	35.08	70.16	140.33	210.49	280.65	350.82	420.98
	180	6.55	16.38	26.20	32.76	65.51	131.02	196.53	262.04	327.55	393.06
	185	6.13	15.33	24.53	30.67	61.33	122.67	184.00	245.34	306.67	368.01
	190	5.76	14.39	23.03	28.78	57.57	115.14	172.71	230.28	287.85	345.42
	195	5.42	13.54	21.66	27.08	54.16	108.32	162.48	216.64	270.80	324.96
	200	5.11	12.77	20.42	25.53	51.06	102.12	153.18	204.24	255.30	306.36
	205	4.82	12.06	19.29	24.12	48.23	96.46	144.70	192.93	241.16	289.39
	210	4.56	11.41	18.26	22.82	45.64	91.29	136.93	182.57	228.22	273.86
	215	4.33	10.82	17.31	21.63	43.27	86.53	129.80	173.07	216.33	259.60
	220	4.11	10.27	16.43	20.54	41.08	82.16	123.23	164.31	205.39	246.47
	225	3.91	9.76	15.62	19.53	39.06	78.12	117.18	156.23	195.29	234.35
	230	3.72	9.30	14.88	18.59	37.19	74.38	111.57	148.76	185.95	223.14
	235	3.55	8.86	14.18	17.73	35.46	70.91	106.37	141.82	177.28	212.74
	240	3.38	8.46	13.54	16.92	33.85	67.69	101.54	135.38	169.23	203.07
	245	3.23	8.09	12.94	16.17	32.35	64.69	97.04	129.38	161.73	194.07
	250	3.09	7.74	12.38	15.47	30.95	61.89	92.84	123.78	154.73	185.67
	255	2.96	7.41	11.86	14.82	29.64	59.28	88.91	118.55	148.19	177.83
	260	2.84	7.10	11.37	14.21	28.41	56.83	85.24	113.65	142.07	170.48
	265	2.73	6.82	10.91	13.63	27.27	54.53	81.80	109.06	136.33	163.59
	270	2.62	6.55	10.47	13.09	26.19	52.37	78.56	104.75	130.94	157.12
	275	2.52	6.29	10.07	12.59	25.17	50.35	75.52	100.69	125.87	151.04
	280	2.42	6.05	9.69	12.11	24.22	48.44	72.66	96.87	121.09	145.31
	285	2.33	5.83	9.33	11.66	23.32	46.64	69.95	93.27	116.59	139.91
	290	2.25	5.62	8.99	11.23	22.47	44.94	67.41	89.87	112.34	134.81
	295	2.17	5.42	8.67	10.83	21.67	43.33	65.00	86.66	108.33	129.99
	300	2.09	5.23	8.36	10.45	20.91	41.81	62.72	83.62	104.53	125.43
	305	2.02	5.05	8.07	10.09	20.19	40.37	60.56	80.74	100.93	121.11
	310	1.95	4.88	7.80	9.75	19.50	39.00	58.51	78.01	97.51	117.01
	315	1.89	4.71	7.54	9.43	18.85	37.71	56.56	75.42	94.27	113.13
	320	1.82	4.56	7.30	9.12	18.24	36.48	54.72	72.95	91.19	109.43
	325	1.77	4.41	7.06	8.83	17.65	35.31	52.96	70.61	88.27	105.92
	330	1.71	4.27	6.84	8.55	17.10	34.19	51.29	68.38	85.48	102.57
	335	1.66	4.14	6.63	8.28	16.56	33.13	49.69	66.26	82.82	99.39
	340	1.61	4.01	6.42	8.03	16.06	32.12	48.18	64.23	80.29	96.35
	345	1.56	3.89	6.23	7.79	15.58	31.15	46.73	62.30	77.88	93.45
	350	1.51	3.78	6.05	7.56	15.11	30.23	45.34	60.46	75.57	90.69
	355	1.47	3.67	5.87	7.34	14.67	29.35	44.02	58.70	73.37	88.04
	360	1.43	3.56	5.70	7.13	14.25	28.50	42.76	57.01	71.26	85.51
	365	1.38	3.46	5.54	6.92	13.85	27.70	41.55	55.40	69.24	83.09
	370	1.35	3.37	5.39	6.73	13.46	26.93	40.39	53.85	67.31	80.78
	375	1.31	3.27	5.24	6.55	13.09	26.19	39.28	52.37	65.46	78.56

Accessories

Over Current Relay (OCR)

Time Chart for LTD Inverse Time (General Feeder)

Item	Tr / x Ir	LTD Time Setting (sec)									
		0.5	1.25	2	2.5	5	10	15	20	25	30
Overload Rate (%)	380	1.27	3.18	5.10	6.37	12.74	25.48	38.21	50.95	63.69	76.43
	385	1.24	3.10	4.96	6.20	12.40	24.79	37.19	49.59	61.99	74.38
	390	1.21	3.02	4.83	6.04	12.07	24.14	36.21	48.28	60.35	72.42
	395	1.18	2.94	4.70	5.88	11.76	23.51	35.27	47.03	58.78	70.54
	400	1.15	2.86	4.58	5.73	11.45	22.91	34.36	45.82	57.27	68.73
	405	1.12	2.79	4.47	5.58	11.16	22.33	33.49	44.66	55.82	66.99
	410	1.09	2.72	4.35	5.44	10.89	21.77	32.66	43.54	54.43	65.31
	415	1.06	2.65	4.25	5.31	10.62	21.23	31.85	42.47	53.08	63.70
	420	1.04	2.59	4.14	5.18	10.36	20.72	31.07	41.43	51.79	62.15
	425	1.01	2.53	4.04	5.05	10.11	20.22	30.33	40.44	50.54	60.65
	430	0.99	2.47	3.95	4.93	9.87	19.74	29.61	39.47	49.34	59.21
	435	0.96	2.41	3.85	4.82	9.64	19.27	28.91	38.55	48.18	57.82
	440	0.94	2.35	3.77	4.71	9.41	18.83	28.24	37.65	47.07	56.48
	445	0.92	2.30	3.68	4.60	9.20	18.39	27.59	36.79	45.99	55.18
	450	0.90	2.25	3.60	4.49	8.99	17.98	26.97	35.95	44.94	53.93
	455	0.88	2.20	3.51	4.39	8.79	17.57	26.36	35.15	43.94	52.72
	460	0.86	2.15	3.44	4.30	8.59	17.19	25.78	34.37	42.96	51.56
	465	0.84	2.10	3.36	4.20	8.40	16.81	25.21	33.62	42.02	50.43
	470	0.82	2.06	3.29	4.11	8.22	16.44	24.67	32.89	41.11	49.33
	475	0.80	2.01	3.22	4.02	8.05	16.09	24.14	32.18	40.23	48.28
	480	0.79	1.97	3.15	3.94	7.88	15.75	23.63	31.50	39.38	47.25
	485	0.77	1.93	3.08	3.86	7.71	15.42	23.13	30.84	38.55	46.26
	490	0.76	1.89	3.02	3.78	7.55	15.10	22.65	30.20	37.75	45.30
	495	0.74	1.85	2.96	3.70	7.40	14.79	22.19	29.58	36.98	44.37
	500	0.72	1.81	2.90	3.62	7.25	14.49	21.74	28.98	36.23	43.47
	505	0.71	1.77	2.84	3.55	7.10	14.20	21.30	28.40	35.50	42.60
	510	0.70	1.74	2.78	3.48	6.96	13.92	20.88	27.83	34.79	41.75
	515	0.68	1.71	2.73	3.41	6.82	13.64	20.46	27.29	34.11	40.93
	520	0.67	1.67	2.68	3.34	6.69	13.38	20.07	26.75	33.44	40.13
	525	0.66	1.64	2.62	3.28	6.56	13.12	19.68	26.24	32.80	39.36
	530	0.64	1.61	2.57	3.22	6.43	12.87	19.30	25.74	32.17	38.60
	535	0.63	1.58	2.52	3.16	6.31	12.62	18.94	25.25	31.56	37.87
	540	0.62	1.55	2.48	3.10	6.19	12.39	18.58	24.77	30.97	37.16
	545	0.61	1.52	2.43	3.04	6.08	12.16	18.24	24.31	30.39	36.47
	550	0.60	1.49	2.39	2.98	5.97	11.93	17.90	23.87	29.83	35.80
	555	0.59	1.46	2.34	2.93	5.86	11.72	17.57	23.43	29.29	35.15
	560	0.58	1.44	2.30	2.88	5.75	11.50	17.26	23.01	28.76	34.51
	565	0.56	1.41	2.26	2.82	5.65	11.30	16.95	22.60	28.24	33.89
	570	0.55	1.39	2.22	2.77	5.55	11.10	16.65	22.19	27.74	33.29
	575	0.55	1.36	2.18	2.73	5.45	10.90	16.35	21.80	27.26	32.71
	580	0.54	1.34	2.14	2.68	5.36	10.71	16.07	21.42	26.78	32.14
	585	0.53	1.32	2.11	2.63	5.26	10.53	15.79	21.05	26.32	31.58
	590	0.52	1.29	2.07	2.59	5.17	10.35	15.52	20.69	25.87	31.04
	595	0.51	1.27	2.03	2.54	5.09	10.17	15.26	20.34	25.43	30.51
	600	0.50	1.25	2.00	2.50	5.00	10.00	15.00	20.00	25.00	30.00
	605	0.49	1.23	1.97	2.46	4.92	9.83	14.75	19.67	24.58	29.50
	610	0.48	1.21	1.93	2.42	4.84	9.67	14.51	19.34	24.18	29.01
	615	0.48	1.19	1.90	2.38	4.76	9.51	14.27	19.02	23.78	28.53
	620	0.47	1.17	1.87	2.34	4.68	9.36	14.04	18.71	23.39	28.07
	625	0.46	1.15	1.84	2.30	4.60	9.21	13.81	18.41	23.01	27.62
	630	0.45	1.13	1.81	2.26	4.53	9.06	13.59	18.12	22.65	27.17
	635	0.45	1.11	1.78	2.23	4.46	8.91	13.37	17.83	22.29	26.74
	640	0.44	1.10	1.75	2.19	4.39	8.77	13.16	17.55	21.93	26.32

Item	x Ir \ Tr	LTD Time Setting (sec)									
		0.5	1.25	2	2.5	5	10	15	20	25	30
Overload Rate (%)	645	0.43	1.08	1.73	2.16	4.32	8.64	12.96	17.27	21.59	25.91
	650	0.43	1.06	1.70	2.13	4.25	8.50	12.75	17.01	21.26	25.51
	655	0.42	1.05	1.67	2.09	4.19	8.37	12.56	16.74	20.93	25.12
	660	0.41	1.03	1.65	2.06	4.12	8.24	12.37	16.49	20.61	24.73
	665	0.41	1.01	1.62	2.03	4.06	8.12	12.18	16.24	20.30	24.36
	670	0.40	1.00	1.60	2.00	4.00	8.00	12.00	15.99	19.99	23.99
	675	0.39	0.98	1.58	1.97	3.94	7.88	11.82	15.76	19.69	23.63
	680	0.39	0.97	1.55	1.94	3.88	7.76	11.64	15.52	19.40	23.28
	685	0.38	0.96	1.53	1.91	3.82	7.65	11.47	15.29	19.12	22.94
	690	0.38	0.94	1.51	1.88	3.77	7.54	11.30	15.07	18.84	22.61
	695	0.37	0.93	1.49	1.86	3.71	7.43	11.14	14.85	18.57	22.28
	700	0.37	0.91	1.46	1.83	3.66	7.32	10.98	14.64	18.30	21.96
	705	0.36	0.90	1.44	1.80	3.61	7.21	10.82	14.43	18.04	21.64
	710	0.36	0.89	1.42	1.78	3.56	7.11	10.67	14.23	17.78	21.34
	715	0.35	0.88	1.40	1.75	3.51	7.01	10.52	14.02	17.53	21.04
	720	0.35	0.86	1.38	1.73	3.46	6.91	10.37	13.83	17.29	20.74
	725	0.34	0.85	1.36	1.70	3.41	6.82	10.23	13.64	17.05	20.46
	730	0.34	0.84	1.34	1.68	3.36	6.72	10.09	13.45	16.81	20.17
	735	0.33	0.83	1.33	1.66	3.32	6.63	9.95	13.26	16.58	19.90
	740	0.33	0.82	1.31	1.64	3.27	6.54	9.81	13.08	16.36	19.63
	745	0.32	0.81	1.29	1.61	3.23	6.45	9.68	12.91	16.14	19.36
	750	0.32	0.80	1.27	1.59	3.18	6.37	9.55	12.73	15.92	19.10
	755	0.31	0.79	1.26	1.57	3.14	6.28	9.42	12.57	15.71	18.85
	760	0.31	0.77	1.24	1.55	3.10	6.20	9.30	12.40	15.50	18.60
	765	0.31	0.76	1.22	1.53	3.06	6.12	9.18	12.24	15.30	18.35
	770	0.30	0.75	1.21	1.51	3.02	6.04	9.06	12.08	15.10	18.11
	775	0.30	0.74	1.19	1.49	2.98	5.96	8.94	11.92	14.90	17.88
	780	0.29	0.74	1.18	1.47	2.94	5.88	8.82	11.77	14.71	17.65
	785	0.29	0.73	1.16	1.45	2.90	5.81	8.71	11.62	14.52	17.42
	790	0.29	0.72	1.15	1.43	2.87	5.73	8.60	11.47	14.33	17.20
	795	0.28	0.71	1.13	1.42	2.83	5.66	8.49	11.32	14.15	16.98
	800	0.28	0.70	1.12	1.40	2.80	5.59	8.39	11.18	13.98	16.77
	805	0.28	0.69	1.10	1.38	2.76	5.52	8.28	11.04	13.80	16.56
	810	0.27	0.68	1.09	1.36	2.73	5.45	8.18	10.90	13.63	16.36
	815	0.27	0.67	1.08	1.35	2.69	5.38	8.08	10.77	13.46	16.15
	820	0.27	0.66	1.06	1.33	2.66	5.32	7.98	10.64	13.30	15.96
	825	0.26	0.66	1.05	1.31	2.63	5.25	7.88	10.51	13.14	15.76
	830	0.26	0.65	1.04	1.30	2.60	5.19	7.79	10.38	12.98	15.57
	835	0.26	0.64	1.03	1.28	2.56	5.13	7.69	10.26	12.82	15.38
	840	0.25	0.63	1.01	1.27	2.53	5.07	7.60	10.13	12.67	15.20
	845	0.25	0.63	1.00	1.25	2.50	5.01	7.51	10.01	12.52	15.02
	850	0.25	0.62	0.99	1.24	2.47	4.95	7.42	9.89	12.37	14.84
	855	0.24	0.61	0.98	1.22	2.44	4.89	7.33	9.78	12.22	14.67
	860	0.24	0.60	0.97	1.21	2.42	4.83	7.25	9.66	12.08	14.50
	865	0.24	0.60	0.96	1.19	2.39	4.78	7.16	9.55	11.94	14.33
	870	0.24	0.59	0.94	1.18	2.36	4.72	7.08	9.44	11.80	14.16
	875	0.23	0.58	0.93	1.17	2.33	4.67	7.00	9.33	11.67	14.00
	880	0.23	0.58	0.92	1.15	2.31	4.61	6.92	9.23	11.53	13.84
	885	0.23	0.57	0.91	1.14	2.28	4.56	6.84	9.12	11.40	13.68
	890	0.23	0.56	0.90	1.13	2.25	4.51	6.76	9.02	11.27	13.53
	895	0.22	0.56	0.89	1.11	2.23	4.46	6.69	8.92	11.15	13.38
	900	0.22	0.55	0.88	1.10	2.20	4.41	6.61	8.82	11.02	13.23
	905	0.22	0.55	0.87	1.09	2.18	4.36	6.54	8.72	10.90	13.08

Accessories

Over Current Relay (OCR)

Time Chart for LTD Inverse Time (General Feeder)

Item	Tr / x Ir	LTD Time Setting (sec)									
		0.5	1.25	2	2.5	5	10	15	20	25	30
Overload Rate (%)	910	0.22	0.54	0.86	1.08	2.16	4.31	6.47	8.63	10.78	12.94
	915	0.21	0.53	0.85	1.07	2.13	4.27	6.40	8.53	10.66	12.80
	920	0.21	0.53	0.84	1.05	2.11	4.22	6.33	8.44	10.55	12.66
	925	0.21	0.52	0.83	1.04	2.09	4.17	6.26	8.35	10.43	12.52
	930	0.21	0.52	0.83	1.03	2.06	4.13	6.19	8.26	10.32	12.38
	935	0.20	0.51	0.82	1.02	2.04	4.08	6.13	8.17	10.21	12.25
	940	0.20	0.51	0.81	1.01	2.02	4.04	6.06	8.08	10.10	12.12
	945	0.20	0.50	0.80	1.00	2.00	4.00	6.00	7.99	9.99	11.99
	950	0.20	0.49	0.79	0.99	1.98	3.96	5.93	7.91	9.89	11.87
	955	0.20	0.49	0.78	0.98	1.96	3.91	5.87	7.83	9.78	11.74
	960	0.19	0.48	0.77	0.97	1.94	3.87	5.81	7.75	9.68	11.62
	965	0.19	0.48	0.77	0.96	1.92	3.83	5.75	7.67	9.58	11.50
	970	0.19	0.47	0.76	0.95	1.90	3.79	5.69	7.59	9.48	11.38
	975	0.19	0.47	0.75	0.94	1.88	3.75	5.63	7.51	9.38	11.26
	980	0.19	0.46	0.74	0.93	1.86	3.72	5.57	7.43	9.29	11.15
	985	0.18	0.46	0.74	0.92	1.84	3.68	5.52	7.36	9.19	11.03
	990	0.18	0.46	0.73	0.91	1.82	3.64	5.46	7.28	9.10	10.92
	995	0.18	0.45	0.72	0.90	1.80	3.60	5.41	7.21	9.01	10.81
	1,000	0.18	0.45	0.71	0.89	1.78	3.57	5.35	7.14	8.92	10.70

Time Chart for LTD Inverse Time (Generator)

Item	x Ir \ Tr	LTD Time Setting (sec)								
		10	15	20	25	30	35	40	50	60
Overload Rate (%)	101	33.12	49.68	66.24	82.80	99.36	115.92	132.49	165.61	198.73
	105	20.04	30.05	40.07	50.09	60.11	70.12	80.14	100.18	120.21
	110	14.77	22.16	29.54	36.93	44.31	51.70	59.08	73.85	88.63
	115	11.90	17.85	23.80	29.76	35.71	41.66	47.61	59.51	71.41
	120	10.00	15.00	20.00	25.00	30.00	35.00	40.00	50.00	60.00
	125	8.62	12.93	17.23	21.54	25.85	30.16	34.47	43.08	51.70
	130	7.56	11.33	15.11	18.89	22.67	26.44	30.22	37.78	45.33
	135	6.71	10.07	13.42	16.78	20.13	23.49	26.84	33.55	40.26
	140	6.02	9.03	12.04	15.05	18.06	21.07	24.08	30.10	36.12
	145	5.44	8.17	10.89	13.61	16.33	19.06	21.78	27.22	32.67
	150	4.96	7.44	9.92	12.39	14.87	17.35	19.83	24.79	29.75
	155	4.54	6.81	9.08	11.35	13.62	15.89	18.16	22.70	27.24
	160	4.18	6.27	8.36	10.44	12.53	14.62	16.71	20.89	25.07
	165	3.86	5.79	7.72	9.65	11.58	13.51	15.44	19.31	23.17
	170	3.58	5.37	7.16	8.95	10.75	12.54	14.33	17.91	21.49
	175	3.33	5.00	6.67	8.34	10.00	11.67	13.34	16.67	20.01
	180	3.11	4.67	6.23	7.78	9.34	10.90	12.45	15.57	18.68
	185	2.91	4.37	5.83	7.29	8.74	10.20	11.66	14.57	17.49
	190	2.74	4.10	5.47	6.84	8.21	9.58	10.94	13.68	16.41
	195	2.57	3.86	5.15	6.43	7.72	9.01	10.29	12.87	15.44
	200	2.43	3.64	4.85	6.07	7.28	8.49	9.71	12.13	14.56
	205	2.29	3.44	4.58	5.73	6.88	8.02	9.17	11.46	13.75
	210	2.17	3.25	4.34	5.42	6.51	7.59	8.68	10.85	13.01
	215	2.06	3.08	4.11	5.14	6.17	7.20	8.22	10.28	12.34
	220	1.95	2.93	3.90	4.88	5.86	6.83	7.81	9.76	11.71
	225	1.86	2.78	3.71	4.64	5.57	6.50	7.42	9.28	11.14
	230	1.77	2.65	3.53	4.42	5.30	6.19	7.07	8.84	10.60
	235	1.68	2.53	3.37	4.21	5.05	5.90	6.74	8.42	10.11
	240	1.61	2.41	3.22	4.02	4.83	5.63	6.43	8.04	9.65
	245	1.54	2.31	3.07	3.84	4.61	5.38	6.15	7.69	9.22
	250	1.47	2.21	2.94	3.68	4.41	5.15	5.88	7.35	8.82
	255	1.41	2.11	2.82	3.52	4.23	4.93	5.63	7.04	8.45
	260	1.35	2.03	2.70	3.38	4.05	4.73	5.40	6.75	8.10
	265	1.30	1.94	2.59	3.24	3.89	4.53	5.18	6.48	7.77
	270	1.24	1.87	2.49	3.11	3.73	4.36	4.98	6.22	7.47
	275	1.20	1.79	2.39	2.99	3.59	4.19	4.78	5.98	7.18
	280	1.15	1.73	2.30	2.88	3.45	4.03	4.60	5.75	6.91
	285	1.11	1.66	2.22	2.77	3.32	3.88	4.43	5.54	6.65
	290	1.07	1.60	2.14	2.67	3.20	3.74	4.27	5.34	6.41
	295	1.03	1.54	2.06	2.57	3.09	3.60	4.12	5.15	6.18
	300	0.99	1.49	1.99	2.48	2.98	3.48	3.97	4.97	5.96
	305	0.96	1.44	1.92	2.40	2.88	3.36	3.84	4.80	5.76
	310	0.93	1.39	1.85	2.32	2.78	3.24	3.71	4.63	5.56
	315	0.90	1.34	1.79	2.24	2.69	3.14	3.58	4.48	5.38
	320	0.87	1.30	1.73	2.17	2.60	3.03	3.47	4.33	5.20
	325	0.84	1.26	1.68	2.10	2.52	2.94	3.36	4.19	5.03
	330	0.81	1.22	1.62	2.03	2.44	2.84	3.25	4.06	4.87
	335	0.79	1.18	1.57	1.97	2.36	2.76	3.15	3.94	4.72
	340	0.76	1.14	1.53	1.91	2.29	2.67	3.05	3.82	4.58
	345	0.74	1.11	1.48	1.85	2.22	2.59	2.96	3.70	4.44
	350	0.72	1.08	1.44	1.80	2.15	2.51	2.87	3.59	4.31
	355	0.70	1.05	1.39	1.74	2.09	2.44	2.79	3.49	4.18
	360	0.68	1.02	1.35	1.69	2.03	2.37	2.71	3.39	4.06

Accessories

Over Current Relay (OCR)

Time Chart for LTD Inverse Time (Generator)

Item	x Ir \ Tr	LTD Time Setting (sec)								
		10	15	20	25	30	35	40	50	60
Overload Rate (%)	365	0.66	0.99	1.32	1.65	1.97	2.30	2.63	3.29	3.95
	370	0.64	0.96	1.28	1.60	1.92	2.24	2.56	3.20	3.84
	375	0.62	0.93	1.24	1.56	1.87	2.18	2.49	3.11	3.73
	380	0.61	0.91	1.21	1.51	1.82	2.12	2.42	3.03	3.63
	385	0.59	0.88	1.18	1.47	1.77	2.06	2.36	2.95	3.53
	390	0.57	0.86	1.15	1.43	1.72	2.01	2.29	2.87	3.44
	395	0.56	0.84	1.12	1.40	1.68	1.96	2.23	2.79	3.35
	400	0.54	0.82	1.09	1.36	1.63	1.91	2.18	2.72	3.27
	405	0.53	0.80	1.06	1.33	1.59	1.86	2.12	2.65	3.18
	410	0.52	0.78	1.03	1.29	1.55	1.81	2.07	2.59	3.10
	415	0.50	0.76	1.01	1.26	1.51	1.77	2.02	2.52	3.03
	420	0.49	0.74	0.98	1.23	1.48	1.72	1.97	2.46	2.95
	425	0.48	0.72	0.96	1.20	1.44	1.68	1.92	2.40	2.88
	430	0.47	0.70	0.94	1.17	1.41	1.64	1.88	2.34	2.81
	435	0.46	0.69	0.92	1.14	1.37	1.60	1.83	2.29	2.75
	440	0.45	0.67	0.89	1.12	1.34	1.57	1.79	2.24	2.68
	445	0.44	0.66	0.87	1.09	1.31	1.53	1.75	2.19	2.62
	450	0.43	0.64	0.85	1.07	1.28	1.50	1.71	2.14	2.56
	455	0.42	0.63	0.84	1.04	1.25	1.46	1.67	2.09	2.51
	460	0.41	0.61	0.82	1.02	1.22	1.43	1.63	2.04	2.45
	465	0.40	0.60	0.80	1.00	1.20	1.40	1.60	2.00	2.40
	470	0.39	0.59	0.78	0.98	1.17	1.37	1.56	1.95	2.34
	475	0.38	0.57	0.76	0.96	1.15	1.34	1.53	1.91	2.29
	480	0.37	0.56	0.75	0.94	1.12	1.31	1.50	1.87	2.25
	485	0.37	0.55	0.73	0.92	1.10	1.28	1.47	1.83	2.20
	490	0.36	0.54	0.72	0.90	1.08	1.26	1.44	1.79	2.15
	495	0.35	0.53	0.70	0.88	1.05	1.23	1.41	1.76	2.11
	500	0.34	0.52	0.69	0.86	1.03	1.21	1.38	1.72	2.07
	505	0.34	0.51	0.67	0.84	1.01	1.18	1.35	1.69	2.02
	510	0.33	0.50	0.66	0.83	0.99	1.16	1.32	1.65	1.98
	515	0.32	0.49	0.65	0.81	0.97	1.13	1.30	1.62	1.94
	520	0.32	0.48	0.64	0.79	0.95	1.11	1.27	1.59	1.91
	525	0.31	0.47	0.62	0.78	0.94	1.09	1.25	1.56	1.87
	530	0.31	0.46	0.61	0.76	0.92	1.07	1.22	1.53	1.83
	535	0.30	0.45	0.60	0.75	0.90	1.05	1.20	1.50	1.80
	540	0.29	0.44	0.59	0.74	0.88	1.03	1.18	1.47	1.77
	545	0.29	0.43	0.58	0.72	0.87	1.01	1.16	1.44	1.73
	550	0.28	0.43	0.57	0.71	0.85	0.99	1.13	1.42	1.70
	555	0.28	0.42	0.56	0.70	0.84	0.97	1.11	1.39	1.67
	560	0.27	0.41	0.55	0.68	0.82	0.96	1.09	1.37	1.64
	565	0.27	0.40	0.54	0.67	0.81	0.94	1.07	1.34	1.61
	570	0.26	0.40	0.53	0.66	0.79	0.92	1.05	1.32	1.58
	575	0.26	0.39	0.52	0.65	0.78	0.91	1.04	1.30	1.55
	580	0.25	0.38	0.51	0.64	0.76	0.89	1.02	1.27	1.53
	585	0.25	0.38	0.50	0.63	0.75	0.88	1.00	1.25	1.50
	590	0.25	0.37	0.49	0.61	0.74	0.86	0.98	1.23	1.48
	595	0.24	0.36	0.48	0.60	0.73	0.85	0.97	1.21	1.45
	600	0.24	0.36	0.48	0.59	0.71	0.83	0.95	1.19	1.43
	605	0.23	0.35	0.47	0.58	0.70	0.82	0.93	1.17	1.40
	610	0.23	0.34	0.46	0.57	0.69	0.80	0.92	1.15	1.38
	615	0.23	0.34	0.45	0.56	0.68	0.79	0.90	1.13	1.36
	620	0.22	0.33	0.44	0.56	0.67	0.78	0.89	1.11	1.33
	625	0.22	0.33	0.44	0.55	0.66	0.77	0.87	1.09	1.31

Item	x Ir \ Tr	LTD Time Setting (sec)								
		10	15	20	25	30	35	40	50	60
Overload Rate (%)	630	0.22	0.32	0.43	0.54	0.65	0.75	0.86	1.08	1.29
	635	0.21	0.32	0.42	0.53	0.64	0.74	0.85	1.06	1.27
	640	0.21	0.31	0.42	0.52	0.63	0.73	0.83	1.04	1.25
	645	0.21	0.31	0.41	0.51	0.62	0.72	0.82	1.03	1.23
	650	0.20	0.30	0.40	0.51	0.61	0.71	0.81	1.01	1.21
	655	0.20	0.30	0.40	0.50	0.60	0.70	0.80	0.99	1.19
	660	0.20	0.29	0.39	0.49	0.59	0.69	0.78	0.98	1.18
	665	0.19	0.29	0.39	0.48	0.58	0.68	0.77	0.96	1.16
	670	0.19	0.29	0.38	0.48	0.57	0.67	0.76	0.95	1.14
	675	0.19	0.28	0.37	0.47	0.56	0.66	0.75	0.94	1.12
	680	0.18	0.28	0.37	0.46	0.55	0.65	0.74	0.92	1.11
	685	0.18	0.27	0.36	0.45	0.55	0.64	0.73	0.91	1.09
	690	0.18	0.27	0.36	0.45	0.54	0.63	0.72	0.90	1.07
	695	0.18	0.26	0.35	0.44	0.53	0.62	0.71	0.88	1.06
	700	0.17	0.26	0.35	0.43	0.52	0.61	0.70	0.87	1.04
	705	0.17	0.26	0.34	0.43	0.51	0.60	0.69	0.86	1.03
	710	0.17	0.25	0.34	0.42	0.51	0.59	0.68	0.84	1.01
	715	0.17	0.25	0.33	0.42	0.50	0.58	0.67	0.83	1.00
	720	0.16	0.25	0.33	0.41	0.49	0.58	0.66	0.82	0.99
	725	0.16	0.24	0.32	0.41	0.49	0.57	0.65	0.81	0.97
	730	0.16	0.24	0.32	0.40	0.48	0.56	0.64	0.80	0.96
	735	0.16	0.24	0.32	0.39	0.47	0.55	0.63	0.79	0.95
	740	0.16	0.23	0.31	0.39	0.47	0.54	0.62	0.78	0.93
	745	0.15	0.23	0.31	0.38	0.46	0.54	0.61	0.77	0.92
	750	0.15	0.23	0.30	0.38	0.45	0.53	0.61	0.76	0.91
	755	0.15	0.22	0.30	0.37	0.45	0.52	0.60	0.75	0.90
	760	0.15	0.22	0.29	0.37	0.44	0.52	0.59	0.74	0.88
	765	0.15	0.22	0.29	0.36	0.44	0.51	0.58	0.73	0.87
	770	0.14	0.22	0.29	0.36	0.43	0.50	0.57	0.72	0.86
	775	0.14	0.21	0.28	0.35	0.42	0.50	0.57	0.71	0.85
	780	0.14	0.21	0.28	0.35	0.42	0.49	0.56	0.70	0.84
	785	0.14	0.21	0.28	0.34	0.41	0.48	0.55	0.69	0.83
	790	0.14	0.20	0.27	0.34	0.41	0.48	0.54	0.68	0.82
	795	0.13	0.20	0.27	0.34	0.40	0.47	0.54	0.67	0.81
	800	0.13	0.20	0.27	0.33	0.40	0.46	0.53	0.66	0.80
	805	0.13	0.20	0.26	0.33	0.39	0.46	0.52	0.66	0.79
	810	0.13	0.19	0.26	0.32	0.39	0.45	0.52	0.65	0.78
	815	0.13	0.19	0.26	0.32	0.38	0.45	0.51	0.64	0.77
	820	0.13	0.19	0.25	0.32	0.38	0.44	0.51	0.63	0.76
	825	0.12	0.19	0.25	0.31	0.37	0.44	0.50	0.62	0.75
	830	0.12	0.18	0.25	0.31	0.37	0.43	0.49	0.62	0.74
	835	0.12	0.18	0.24	0.30	0.37	0.43	0.49	0.61	0.73
	840	0.12	0.18	0.24	0.30	0.36	0.42	0.48	0.60	0.72
	845	0.12	0.18	0.24	0.30	0.36	0.42	0.48	0.59	0.71
	850	0.12	0.18	0.24	0.29	0.35	0.41	0.47	0.59	0.71
	855	0.12	0.17	0.23	0.29	0.35	0.41	0.46	0.58	0.70
	860	0.11	0.17	0.23	0.29	0.34	0.40	0.46	0.57	0.69
	865	0.11	0.17	0.23	0.28	0.34	0.40	0.45	0.57	0.68
	870	0.11	0.17	0.22	0.28	0.34	0.39	0.45	0.56	0.67
	875	0.11	0.17	0.22	0.28	0.33	0.39	0.44	0.55	0.67
	880	0.11	0.16	0.22	0.27	0.33	0.38	0.44	0.55	0.66
	885	0.11	0.16	0.22	0.27	0.33	0.38	0.43	0.54	0.65
	890	0.11	0.16	0.21	0.27	0.32	0.38	0.43	0.54	0.64

Accessories

Over Current Relay (OCR)

Time Chart for LTD Inverse Time (Generator)

Item	Tr / x Ir	LTD Time Setting (sec)								
		10	15	20	25	30	35	40	50	60
Overload Rate (%)	895	0.11	0.16	0.21	0.26	0.32	0.37	0.42	0.52	0.64
	900	0.10	0.16	0.21	0.26	0.31	0.37	0.42	0.52	0.63
	905	0.10	0.16	0.21	0.26	0.31	0.36	0.41	0.52	0.62
	910	0.10	0.15	0.20	0.26	0.31	0.36	0.41	0.51	0.61
	915	0.10	0.15	0.20	0.25	0.30	0.35	0.41	0.51	0.61
	920	0.10	0.15	0.20	0.25	0.30	0.35	0.40	0.50	0.60
	925	0.10	0.15	0.20	0.25	0.30	0.35	0.40	0.50	0.59
	930	0.10	0.15	0.20	0.25	0.29	0.34	0.39	0.49	0.59
	935	0.10	0.15	0.19	0.24	0.29	0.34	0.39	0.49	0.58
	940	0.10	0.14	0.19	0.24	0.29	0.34	0.38	0.48	0.58
	945	0.09	0.14	0.19	0.24	0.28	0.33	0.38	0.47	0.57
	950	0.09	0.14	0.19	0.23	0.28	0.33	0.38	0.47	0.56
	955	0.09	0.14	0.19	0.23	0.28	0.33	0.37	0.46	0.56
	960	0.09	0.14	0.18	0.23	0.28	0.32	0.37	0.46	0.55
	965	0.09	0.14	0.18	0.23	0.27	0.32	0.36	0.46	0.55
	970	0.09	0.14	0.18	0.23	0.27	0.32	0.36	0.45	0.54
	975	0.09	0.13	0.18	0.22	0.27	0.31	0.36	0.45	0.54
	980	0.09	0.13	0.18	0.22	0.26	0.31	0.35	0.44	0.53
	985	0.09	0.13	0.17	0.22	0.26	0.31	0.35	0.44	0.52

Time Chart for STD Inverse Time (General Feeder)

Item	Tsd / x In	STD Time Setting (ms) Inland Type					
		50	100	200	300	400	500
Overload Rate (%)	100	5,000	10,000	20,000	30,000	40,000	50,000
	110	4,132	8,264	16,529	24,793	33,058	41,322
	120	3,472	6,944	13,889	20,833	27,778	34,722
	130	2,959	5,917	11,834	17,751	23,669	29,586
	140	2,551	5,102	10,204	15,306	20,408	25,510
	150	2,222	4,444	8,889	13,333	17,778	22,222
	160	1,953	3,906	7,813	11,719	15,625	19,531
	170	1,730	3,460	6,920	10,381	13,841	17,301
	180	1,543	3,086	6,173	9,259	12,346	15,432
	190	1,385	2,770	5,540	8,310	11,080	13,850
	200	1,250	2,500	5,000	7,500	10,000	12,500
	210	1,134	2,268	4,535	6,803	9,070	11,338
	220	1,033	2,066	4,132	6,198	8,264	10,331
	230	945	1,890	3,781	5,671	7,561	9,452
	240	868	1,736	3,472	5,208	6,944	8,681
	250	800	1,600	3,200	4,800	6,400	8,000
	260	740	1,479	2,959	4,438	5,917	7,396
	270	686	1,372	2,743	4,115	5,487	6,859
	280	638	1,276	2,551	3,827	5,102	6,378
	290	595	1,189	2,378	3,567	4,756	5,945
	300	556	1,111	2,222	3,333	4,444	5,556
	310	520	1,041	2,081	3,122	4,162	5,203
	320	488	977	1,953	2,930	3,906	4,883
	330	459	918	1,837	2,755	3,673	4,591
	340	433	865	1,730	2,595	3,460	4,325
	350	408	816	1,633	2,449	3,265	4,082
	360	386	772	1,543	2,315	3,086	3,858
	370	365	730	1,461	2,191	2,922	3,652
	380	346	693	1,385	2,078	2,770	3,463
	390	329	657	1,315	1,972	2,630	3,287
	400	313	625	1,250	1,875	2,500	3,125
	410	297	595	1,190	1,785	2,380	2,974
	420	283	567	1,134	1,701	2,268	2,834
	430	270	541	1,082	1,622	21,63	2,704
	440	258	517	1,033	1,550	2,066	2,583
	450	247	494	988	1,481	1,975	2,469
	460	236	473	945	1,418	1,890	2,363
	470	226	453	905	13,58	1,811	2,263
	480	217	434	868	1,302	1,736	2,170
	490	208	416	833	1,249	1,666	2,082
	500	200	400	800	1,200	1,600	2,000
	510	192	384	769	1,153	1,538	1,922
	520	185	370	740	1,109	1,479	1,849
	530	178	356	712	1,068	1,424	1,780
	540	171	343	686	1,029	1,372	1,715
	550	165	331	661	992	1,322	1,653
	560	159	319	638	957	1,276	1,594
	570	154	308	616	923	1,231	1,539
	580	149	297	595	892	1,189	1,486
	590	144	287	575	862	1149	1,436
	600	139	278	556	833	11,11	1,389
	610	134	269	537	806	1,075	1,344
	620	130	260	520	780	1,041	1,301

Item	Tsd / x In	STD Time Setting (ms) Inland Type					
		50	100	200	300	400	500
Overload Rate (%)	630	126	252	504	756	1,008	12,60
	640	122	244	488	732	977	1,221
	650	118	237	473	710	947	1,183
	660	115	230	459	689	918	1,148
	670	111	223	446	668	891	1,114
	680	108	216	433	649	865	1,081
	690	105	210	420	630	840	1,050
	700	102	204	408	612	816	1,020
	710	99	198	397	595	793	992
	720	96	193	386	579	772	965
	730	94	188	375	563	751	938
	740	91	183	365	548	730	913
	750	89	178	356	533	711	889
	760	87	173	346	519	693	866
	770	84	169	337	506	675	843
	780	82	164	329	493	657	822
	790	80	160	320	481	641	801
	800	78	156	313	469	625	781
	810	76	152	305	457	610	762
	820	74	149	297	446	595	744
	830	73	145	290	435	581	726
	840	71	142	283	425	567	709
	850	69	138	277	415	554	692
	860	68	135	270	406	541	676
	870	66	132	264	396	528	661
	880	65	129	258	387	517	646
	890	63	126	252	379	505	631
	900	62	123	247	370	494	617
	910	60	121	242	362	483	604
	920	59	118	236	354	473	591
	930	58	116	231	347	462	578
	940	57	113	226	340	453	566
	950	55	111	222	332	443	554
	960	54	109	217	326	434	543
	970	53	106	213	319	425	531
	980	52	104	208	312	416	521
	990	51	102	204	306	408	510
	1,000	50	100	200	300	400	500

Accessories

Over Current Relay (OCR)

Time Chart for STD Inverse Time (Generator)

Item	Tsd / x In	STD Time Setting (ms) Marine Type					
		50	100	200	300	400	500
Overload Rate (%)	100	1,250	2,500	5,000	7,500	1,0000	12,500
	110	1,033	2,066	4,132	6,198	8,264	10,331
	120	868	1,736	3,472	5,208	6,944	8,681
	130	740	1,479	2,959	4,438	5,917	7,396
	140	638	1,276	2,551	3,827	5,102	6,378
	150	556	1,111	2,222	3,333	4,444	5,556
	160	488	977	1,953	2,930	3,906	4,883
	170	433	865	1,730	2,595	3,460	4,325
	180	386	772	1,543	2,315	3,086	3,858
	190	346	693	1,385	2,078	2,770	3,463
	200	313	625	1,250	1,875	2,500	3,125
	210	283	567	1,134	1,701	2,268	2,834
	220	258	517	1,033	1,550	2,066	2,583
	230	236	473	945	1,418	1,890	2,363
	240	217	434	868	1,302	1,736	2,170
	250	200	400	800	1,200	1,600	2,000
	260	185	370	740	1,109	1,479	1,849
	270	171	343	686	1,029	1,372	1,715
	280	159	319	638	957	1,276	1,594
	290	149	297	595	892	1,189	1,486
	300	139	278	556	833	1,111	1,389
	310	130	260	520	780	1,041	1,301
	320	122	244	488	732	977	1,221
	330	115	230	459	689	918	1,148
	340	108	216	433	649	865	1,081
	350	102	204	408	612	816	1,020
	360	96	193	386	579	772	965
	370	91	183	365	548	730	913
	380	87	173	346	519	693	866
	390	82	164	329	493	657	822
	400	78	156	313	469	625	781
	410	74	149	297	446	595	744
	420	71	142	283	425	567	709
	430	68	135	270	406	541	676
	440	65	129	258	387	517	646
	450	62	123	247	370	494	617
	460	59	118	236	354	473	591
	470	57	113	226	340	453	566
	480	54	109	217	326	434	543
	490	52	104	208	312	416	521
	500	50	100	200	300	400	500

Time Chart for GFT Inverse Time (General Feeder)

Item	Tg / x Ict	GFT Time Setting (ms)					
		50	100	200	300	400	500
Detection Setting Current (%)	10	5,000	10,000	20,000	30,000	40,000	50,000
	11	4,132	8,264	16,529	24,793	33,058	41,322
	12	3,472	6,944	13,889	20,833	27,778	34,722
	13	2,959	5,917	11,834	17,751	23,669	29,586
	14	2,551	5,102	10,204	15,306	20,408	25,510
	15	2,222	4,444	8,889	13,333	17,778	22,222
	16	1,953	3,906	7,813	11,719	15,625	19,531
	17	1,730	3,460	6,920	10,381	13,841	17,301
	18	1,543	3,086	6,173	9,259	12,346	15,432
	19	1,385	2,770	5,540	8,310	11,080	13,850
	20	1,250	2,500	5,000	7,500	10,000	12,500
	21	1,134	2,268	4,535	6,803	9,070	11,338
	22	1,033	2,066	4,132	6,198	8,264	10,331
	23	945	1,890	3,781	5,671	7,561	9,452
	24	868	1,736	3,472	5,208	6,944	8,681
	25	800	1,600	3,200	4,800	6,400	8,000
	26	740	1,479	2,959	4,438	5,917	7,396
	27	686	1,372	2,743	4,115	5,487	6,859
	28	638	1,276	2,551	3,827	5,102	6,378
	29	595	1,189	2,378	3,567	4,756	5,945
	30	556	1,111	2,222	3,333	4,444	5,556
	31	520	1,041	2,081	3,122	4,162	5,203
	32	488	977	1,953	2,930	3,906	4,883
	33	459	918	1,837	2,755	3,673	4,591
	34	433	865	1,730	2,595	3,460	4,325
	35	408	816	1,633	2,449	3,265	4,082
	36	386	772	1,543	2,315	3,086	3,858
	37	365	730	1,461	2,191	2,922	3,652
	38	346	693	1,385	2,078	2,770	3,463
	39	329	657	1,315	1,972	2,630	3,287
	40	313	625	1,250	1,875	2,500	3,125
	41	297	595	1,190	1,785	2,380	2,974
	42	283	567	1,134	1,701	2,268	2,834
	43	270	541	1,082	1,622	2,163	2,704
	44	258	517	1,033	1,550	2,066	2,583
	45	247	494	988	1,481	1,975	2,469
	46	236	473	945	1,418	1,890	2,363
	47	226	453	905	1,358	1,811	2,263
	48	217	434	868	1,302	1,736	2,170
	49	208	416	833	1,249	1,666	2,082
	50	200	400	800	1,200	1,600	2,000
	51	192	384	769	1,153	1,538	1,922
	52	185	370	740	1,109	1,479	1,849
	53	178	356	712	1,068	1,424	1,780
	54	171	343	686	1,029	1,372	1715
	55	165	331	661	992	1,322	1,653
	56	159	319	638	957	1,276	1,594
	57	154	308	616	923	1,231	1,539
	58	149	297	595	892	1,189	1,486
	59	144	287	575	862	1,149	1,436
	60	139	278	556	833	1,111	1,389
	61	134	269	537	806	1,075	1,344
	62	130	260	520	780	1,041	1,301

Item	Tg / x Ict	GFT Time Setting (ms)					
		50	100	200	300	400	500
Detection Setting Current (%)	63	126	252	504	756	1,008	1,260
	64	122	244	488	732	977	1,221
	65	118	237	473	710	947	1,183
	66	115	230	459	689	918	1,148
	67	111	223	446	668	891	1,114
	68	108	216	433	649	865	1,081
	69	105	210	420	630	840	1,050
	70	102	204	408	612	816	1,020
	71	99	198	397	595	793	992
	72	96	193	386	579	772	965
	73	94	188	375	563	751	938
	74	91	183	365	548	730	913
	75	89	178	356	533	711	889
	76	87	173	346	519	693	866
	77	84	169	337	506	675	843
	78	82	164	329	493	657	822
	79	80	160	320	481	641	801
	80	78	156	313	469	625	781
	81	76	152	305	457	610	762
	82	74	149	297	446	595	744
	83	73	145	290	435	581	726
	84	71	142	283	425	567	709
	85	69	138	277	415	554	692
	86	68	135	270	406	541	676
	87	66	132	264	396	528	661
	88	65	129	258	387	517	646
	89	63	126	252	379	505	631
	90	62	123	247	370	494	617
	91	60	121	242	362	483	604
	92	59	118	236	354	473	591
	93	58	116	231	347	462	578
	94	57	113	226	340	453	566
	95	55	111	222	332	443	554
	96	54	109	217	326	434	543
	97	53	106	213	319	425	531
	98	52	104	208	312	416	521
	99	51	102	204	306	408	510
	100	50	100	200	300	400	500

Accessories

Over Current Relay (OCR)

Time Chart for PTA Inverse Time (Generator)

Item	Tp / x Ip	PTA Time Setting (sec)								
		1	5	10	15	20	25	30	35	40
Detection Setting Current (%)	49	6.00	29.99	59.98	89.96	119.95	149.94	179.93	209.91	239.90
	50	5.76	28.80	57.60	86.40	115.20	144.00	172.80	201.60	230.40
	51	5.54	27.68	55.36	83.04	110.73	138.41	166.09	193.77	221.45
	52	5.33	26.63	53.25	79.88	106.51	133.14	159.76	186.39	213.02
	53	5.13	25.63	51.26	76.90	102.53	128.16	153.79	179.42	205.06
	54	4.94	24.69	49.38	74.07	98.77	123.46	148.15	172.84	197.53
	55	4.76	23.80	47.60	71.40	95.21	119.01	142.81	166.61	190.41
	56	4.59	22.96	45.92	68.88	91.84	114.80	137.76	160.71	183.67
	57	4.43	22.16	44.32	66.48	88.64	110.80	132.96	155.12	177.29
	58	4.28	21.40	42.81	64.21	85.61	107.02	128.42	149.82	171.22
	59	4.14	20.68	41.37	62.05	82.73	103.42	124.10	144.79	165.47
	60	4.00	20.00	40.00	60.00	80.00	100.00	120.00	140.00	160.00
	61	3.87	19.35	38.70	58.05	77.40	96.75	116.10	135.45	154.80
	62	3.75	18.73	37.46	56.19	74.92	93.65	112.38	131.11	149.84
	63	3.63	18.14	36.28	54.42	72.56	90.70	108.84	126.98	145.12
	64	3.52	17.58	35.16	52.73	70.31	87.89	105.47	123.05	140.63
	65	3.41	17.04	34.08	51.12	68.17	85.21	102.25	119.29	136.33
	66	3.31	16.53	33.06	49.59	66.12	82.64	99.17	115.70	132.23
	67	3.21	16.04	32.08	48.12	64.16	80.20	96.24	112.27	128.31
	68	3.11	15.57	31.14	46.71	62.28	77.85	93.43	109.00	124.57
	69	3.02	15.12	30.25	45.37	60.49	75.61	90.74	105.86	120.98
	70	2.94	14.69	29.39	44.08	58.78	73.47	88.16	102.86	117.55
	71	2.86	14.28	28.57	42.85	57.13	71.41	85.70	99.98	114.26
	72	2.78	13.89	27.78	41.67	55.56	69.44	83.33	97.22	111.11
	73	2.70	13.51	27.02	40.53	54.04	67.55	81.07	94.58	108.09
	74	2.63	13.15	26.30	39.44	52.59	65.74	78.89	92.04	105.19
	75	2.56	12.80	25.60	38.40	51.20	64.00	76.80	89.60	102.40
	76	2.49	12.47	24.93	37.40	49.86	62.33	74.79	87.26	99.72
	77	2.43	12.14	24.29	36.43	48.57	60.72	72.86	85.01	97.15
	78	2.37	11.83	23.67	35.50	47.34	59.17	71.01	82.84	94.67
	79	2.31	11.54	23.07	34.61	46.15	57.68	69.22	80.76	92.29
	80	2.25	11.25	22.50	33.75	45.00	56.25	67.50	78.75	90.00
	81	2.19	10.97	21.95	32.92	43.90	54.87	65.84	76.82	87.79
	82	2.14	10.71	21.42	32.12	42.83	53.54	64.25	74.96	85.66
	83	2.09	10.45	20.90	31.35	41.81	52.26	62.71	73.16	83.61
	84	2.04	10.20	20.41	30.61	40.82	51.02	61.22	71.43	81.63
	85	1.99	9.97	19.93	29.90	39.86	49.83	59.79	69.76	79.72
	86	1.95	9.73	19.47	29.20	38.94	48.67	58.41	68.14	77.88
	87	1.90	9.51	19.02	28.54	38.05	47.56	57.07	66.59	76.10
	88	1.86	9.30	18.60	27.89	37.19	46.49	55.79	65.08	74.38
	89	1.82	9.09	18.18	27.27	36.36	45.45	54.54	63.63	72.72
	90	1.78	8.89	17.78	26.67	35.56	44.44	53.33	62.22	71.11
	91	1.74	8.69	17.39	26.08	34.78	43.47	52.17	60.86	69.56
	92	1.70	8.51	17.01	25.52	34.03	42.53	51.04	59.55	68.05
	93	1.66	8.32	16.65	24.97	33.30	41.62	49.95	58.27	66.60
	94	1.63	8.15	16.30	24.45	32.59	40.74	48.89	57.04	65.19
	95	1.60	7.98	15.96	23.93	31.91	39.89	47.87	55.84	63.82
	96	1.56	7.81	15.63	23.44	31.25	39.06	46.88	54.69	62.50
	97	1.53	7.65	15.30	22.96	30.61	38.26	45.91	53.57	61.22
	98	1.50	7.50	14.99	22.49	29.99	37.48	44.98	52.48	59.98
	99	1.47	7.35	14.69	22.04	29.38	36.73	44.08	51.42	58.77
	100	1.44	7.20	14.40	21.60	28.80	36.00	43.20	50.40	57.60
	101	1.41	7.06	14.12	21.17	28.23	35.29	42.35	49.41	56.47

Item	x Ip \ Tp	PTA Time Setting (sec)								
		1	5	10	15	20	25	30	35	40
Detection Setting Current (%)	102	1.38	6.92	13.84	20.76	27.68	34.60	41.52	48.44	55.36
	103	1.36	6.79	13.57	20.36	27.15	33.93	40.72	47.51	54.29
	104	1.33	6.66	13.31	19.97	26.63	33.28	39.94	46.60	53.25
	105	1.31	6.53	13.06	19.59	26.12	32.65	39.18	45.71	52.24
	106	1.28	6.41	12.82	19.22	25.63	32.04	38.45	44.86	51.26
	107	1.26	6.29	12.58	18.87	25.16	31.44	37.73	44.02	50.31
	108	1.23	6.17	12.35	18.52	24.69	30.86	37.04	43.21	49.38
	109	1.21	6.06	12.12	18.18	24.24	30.30	36.36	42.42	48.48
	110	1.19	5.95	11.90	17.85	23.80	29.75	35.70	41.65	47.60
	111	1.17	5.84	11.69	17.53	23.37	29.22	35.06	40.91	46.75
	112	1.15	5.74	11.48	17.22	22.96	28.70	34.44	40.18	45.92
	113	1.13	5.64	11.28	16.92	22.55	28.19	33.83	39.47	45.11
	114	1.11	5.54	11.08	16.62	22.16	27.70	33.24	38.78	44.32
	115	1.09	5.44	10.89	16.33	21.78	27.22	32.67	38.11	43.55
	116	1.07	5.35	10.70	16.05	21.40	26.75	32.10	37.46	42.81
	117	1.05	5.26	10.52	15.78	21.04	26.30	31.56	36.82	42.08
	118	1.03	5.17	10.34	15.51	20.68	25.85	31.03	36.20	41.37
	119	1.02	5.08	10.17	15.25	20.34	25.42	30.51	35.59	40.68
	120	1.00	5.00	10.00	15.00	20.00	25.00	30.00	35.00	40.00
	121	0.98	4.92	9.84	14.75	19.67	24.59	29.51	34.42	39.34
	122	0.97	4.84	9.67	14.51	19.35	24.19	29.02	33.86	38.70
	123	0.95	4.76	9.52	14.28	19.04	23.80	28.55	33.31	38.07
	124	0.94	4.68	9.37	14.05	18.73	23.41	28.10	32.78	37.46
	125	0.92	4.61	9.22	13.82	18.43	23.04	27.65	32.26	36.86
	126	0.91	4.54	9.07	13.61	18.14	22.68	27.21	31.75	36.28
	127	0.89	4.46	8.93	13.39	17.86	22.32	26.78	31.25	35.71
	128	0.88	4.39	8.79	13.18	17.58	21.97	26.37	30.76	35.16
	129	0.87	4.33	8.65	12.98	17.31	21.63	25.96	30.29	34.61
	130	0.85	4.26	8.52	12.78	17.04	21.30	25.56	29.82	34.08
	131	0.84	4.20	8.39	12.59	16.78	20.98	25.17	29.37	33.56
	132	0.83	4.13	8.26	12.40	16.53	20.66	24.79	28.93	33.06
	133	0.81	4.07	8.14	12.21	16.28	20.35	24.42	28.49	32.56
	134	0.80	4.01	8.02	12.03	16.04	20.05	24.06	28.07	32.08
	135	0.79	3.95	7.90	11.85	15.80	19.75	23.70	27.65	31.60
	136	0.78	3.89	7.79	11.68	15.57	19.46	23.36	27.25	31.14
	137	0.77	3.84	7.67	11.51	15.34	19.18	23.02	26.85	30.69
	138	0.76	3.78	7.56	11.34	15.12	18.90	22.68	26.47	30.25
	139	0.75	3.73	7.45	11.18	14.91	18.63	22.36	26.09	29.81
	140	0.73	3.67	7.35	11.02	14.69	18.37	22.04	25.71	29.39
	141	0.72	3.62	7.24	10.86	14.49	18.11	21.73	25.35	28.97
	142	0.71	3.57	7.14	10.71	14.28	17.85	21.42	25.00	28.57
	143	0.70	3.52	7.04	10.56	14.08	17.60	21.13	24.65	28.17
	144	0.69	3.47	6.94	10.42	13.89	17.36	20.83	24.31	27.78
	145	0.68	3.42	6.85	10.27	13.70	17.12	20.55	23.97	27.40
	146	0.68	3.38	6.76	10.13	13.51	16.89	20.27	23.64	27.02
	147	0.67	3.33	6.66	10.00	13.33	16.66	19.99	23.32	26.66
	148	0.66	3.29	6.57	9.86	13.15	16.44	19.72	23.01	26.30
	149	0.65	3.24	6.49	9.73	12.97	16.22	19.46	22.70	25.94
	150	0.64	3.20	6.40	9.60	12.80	16.00	19.20	22.40	25.60
	151	0.63	3.16	6.32	9.47	12.63	15.79	18.95	22.10	25.26
	152	0.62	3.12	6.23	9.35	12.47	15.58	18.70	21.81	24.93
	153	0.62	3.08	6.15	9.23	12.30	15.38	18.45	21.53	24.61
	154	0.61	3.04	6.07	9.11	12.14	15.18	18.22	21.25	24.29

Accessories

Over Current Relay (OCR)

Time Chart for PTA Inverse Time (Generator)

Item	Tp / x Ip	PTA Time Setting (sec)								
		1	5	10	15	20	25	30	35	40
Detection Setting Current (%)	155	0.60	3.00	5.99	8.99	11.99	14.98	17.98	20.98	23.98
	156	0.59	2.96	5.92	8.88	11.83	14.79	17.75	20.71	23.67
	157	0.58	2.92	5.84	8.76	11.68	14.61	17.53	20.45	23.37
	158	0.58	2.88	5.77	8.65	11.54	14.42	17.30	20.19	23.07
	159	0.57	2.85	5.70	8.54	11.39	14.24	17.09	19.94	22.78
	160	0.56	2.81	5.63	8.44	11.25	14.06	16.88	19.69	22.50
	161	0.56	2.78	5.56	8.33	11.11	13.89	16.67	19.44	22.22
	162	0.55	2.74	5.49	8.23	10.97	13.72	16.46	19.20	21.95
	163	0.54	2.71	5.42	8.13	10.84	13.55	16.26	18.97	21.68
	164	0.54	2.68	5.35	8.03	10.71	13.38	16.06	18.74	21.42
	165	0.53	2.64	5.29	7.93	10.58	13.22	15.87	18.51	21.16
	166	0.52	2.61	5.23	7.84	10.45	13.06	15.68	18.29	20.90
	167	0.52	2.58	5.16	7.74	10.33	12.91	15.49	18.07	20.65
	168	0.51	2.55	5.10	7.65	10.20	12.76	15.31	17.86	20.41
	169	0.50	2.52	5.04	7.56	10.08	12.60	15.13	17.65	20.17
	170	0.50	2.49	4.98	7.47	9.97	12.46	14.95	17.44	19.93
	171	0.49	2.46	4.92	7.39	9.85	12.31	14.77	17.24	19.70
	172	0.49	2.43	4.87	7.30	9.73	12.17	14.60	17.04	19.47
	173	0.48	2.41	4.81	7.22	9.62	12.03	14.43	16.84	19.25
	174	0.48	2.38	4.76	7.13	9.51	11.89	14.27	16.65	19.02
	175	0.47	2.35	4.70	7.05	9.40	11.76	14.11	16.46	18.81
	176	0.46	2.32	4.65	6.97	9.30	11.62	13.95	16.27	18.60
	177	0.46	2.30	4.60	6.89	9.19	11.49	13.79	16.09	18.39
	178	0.45	2.27	4.54	6.82	9.09	11.36	13.63	15.91	18.18
	179	0.45	2.25	4.49	6.74	8.99	11.24	13.48	15.73	17.98
	180	0.44	2.22	4.44	6.67	8.89	11.11	13.33	15.56	17.78
	181	0.44	2.20	4.40	6.59	8.79	10.99	13.19	15.38	17.58
	182	0.43	2.17	4.35	6.52	8.69	10.87	13.04	15.22	17.39
	183	0.43	2.15	4.30	6.45	8.60	10.75	12.90	15.05	17.20
	184	0.43	2.13	4.25	6.38	8.51	10.63	12.76	14.89	17.01
	185	0.42	2.10	4.21	6.31	8.41	10.52	12.62	14.73	16.83
	186	0.42	2.08	4.16	6.24	8.32	10.41	12.49	14.57	16.65
	187	0.41	2.06	4.12	6.18	8.24	10.29	12.35	14.41	16.47
	188	0.41	2.04	4.07	6.11	8.15	10.19	12.22	14.26	16.30
	189	0.40	2.02	4.03	6.05	8.06	10.08	12.09	14.11	16.12
	190	0.40	1.99	3.99	5.98	7.98	9.97	11.97	13.96	15.96
	191	0.39	1.97	3.95	5.92	7.89	9.87	11.84	13.82	15.79
	192	0.39	1.95	3.91	5.86	7.81	9.77	11.72	13.67	15.63
	193	0.39	1.93	3.87	5.80	7.73	9.66	11.60	13.53	15.46
	194	0.38	1.91	3.83	5.74	7.65	9.57	11.48	13.39	15.30
	195	0.38	1.89	3.79	5.68	7.57	9.47	11.36	13.25	15.15
	196	0.37	1.87	3.75	5.62	7.50	9.37	11.25	13.12	14.99
	197	0.37	1.86	3.71	5.57	7.42	9.28	11.13	12.99	14.84
	198	0.37	1.84	3.67	5.51	7.35	9.18	11.02	12.86	14.69
	198	0.36	1.82	3.64	5.45	7.27	9.09	10.91	12.73	14.55
	198	0.36	1.80	3.60	5.40	7.20	9.00	10.80	12.60	14.40
	200	0.36	1.80	3.60	5.40	7.20	9.00	10.80	12.60	14.40

Accessories

Spring Charging Geared Motor

- Manual charging method and geared motor charging method using external power source for charging the spring in the circuit breaker.
- As for the geared motor charging method, if power is applied to the control power terminal number (1), (2), spring charge is possible at 85 ~ 110 % power of the operating voltage range.
- Add M1 ~ M9 in the order form.
- It can be purchased separately.

Ordering Method

Name of Accessory	Order Name Placed upon Outgoing	Detailed Specification
Spring Charging Geared Motor	M1	AC/DC 110 V
	M2	AC/DC 220 V
	M3	AC 380 V (Under Development)
	M4	AC 440 V (Under Development)
	M7	DC 24 V
	M8	DC 48 V
	M9	DC 125 V

Ratings

Item	DC 110	DC 220
Rated Current (A)	1.2	0.5
Starting Pick-Up (A)	5 ~ 6 times the rated current	
Final Rated rpm	16 ± 3	
Charging Time (sec)	Within 5 seconds 1)	
Rated Torque (kgf)	300 kgf×cm	
Rated Watt (W)	100	100
Dielectric Strength (V/min)	2,000	
Insulation Resistance (MΩ)	100	
Workable Temperature (°C)	-15 ~ 60	

※ 1) Charging time is within 10 sec of rated, in case of DC 24/48 V.

Wire Ratings

Rated Voltage	DC 24, 48		DC 110, 220	
	AWG (mm^2)	Insulation Level (V)	AWG (mm^2)	Insulation Level (V)
Specification	18	600	18	600

Connection Diagram

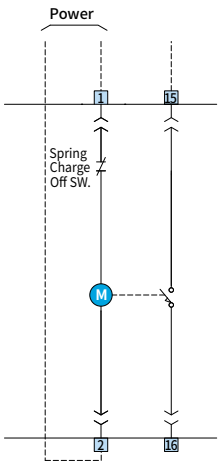

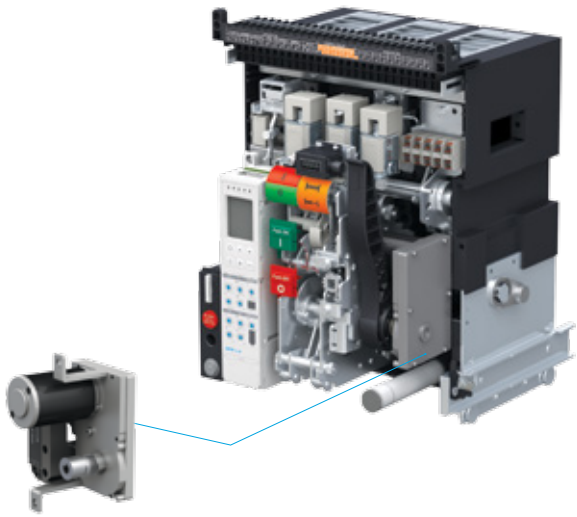

Spring Charging Geared Motor

Spring Charging Switch or Ready to Close Switch

- Spring charging switch delivers (15, 16) the charged status when mechanism spring charge is complete.
- Read to close switch delivers (15, 16) only when the circuit breaker is open and simultaneously only when the mechanism spring charge is complete.
- Order name of spring charging switch : B6, Order name of ready to close switch : BT
- Two accessories cannot be ordered simultaneously.

Accessories

Closing Coil (CC)

- A control device which closes a circuit breaker remotely from outside.
- The circuit breaker is closed by applying power of at least more than 150 ms within the range of 85 ~ 110 % of the rated control voltage to the control power terminal number (3) and (4).
- Add C1 ~ C9 in the order form when ordering the main unit.
- It can be purchased separately.
- Use a separate switch externally to apply power to the closing coil.

Ordering Method

Name of Accessory	Order Name Placed upon Outgoing	Detailed Specification
Closing Coil	C1	AC/DC 110 V
	C2	AC/DC 220 V
	C3	AC 380 V
	C4	AC 440 V
	C7	DC 24 V
	C8	DC 48 V
	C9	DC 125 V

Connection Diagram

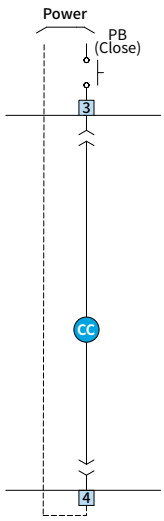

Ratings

Item	DC (V)	AC (V)
Rated Voltage (Vn)	24	-
	100 ~ 130	100 ~ 130
	200 ~ 250	200 ~ 250
Operating Limits (Vn)	0.85 ~ 1.1	
Power Consumption (VA)	Inrush (300), Steady-State (10)	
Trip Time (ms)	80	

Wire Ratings

Rated Voltage	DC 24		AC/DC 110, 220	
	AWG (mm^2)	Insulation Level (V)	AWG (mm^2)	Insulation Level (V)
Specification	20	600	20	600

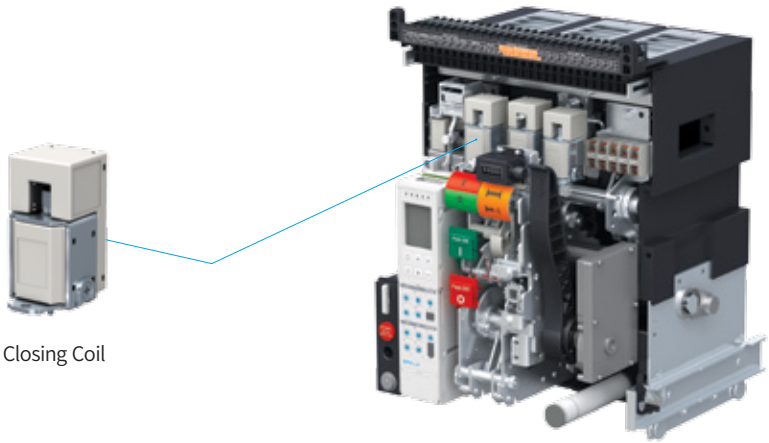

Closing Coil

Trip Coil (TC)

- A control device which trips a circuit breaker remotely.
- The circuit breaker is tripped by applying power of at least more than 150 ms within the range of 70 ~ 110 % of the rated control voltage to the control power terminal number (7) and (8).
- Add S1 ~ S9 in the order form when ordering the main unit.
- It can be purchased separately.
- Use a separate switch externally to apply power to the closing coil.

Connection Diagram

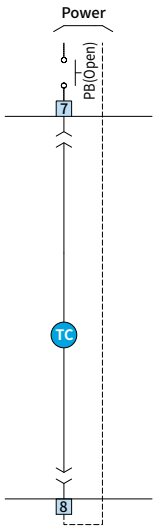

Ordering Method

Name of Accessory	Order Name Placed upon Outgoing	Detailed Specification
Trip Coil	S1	AC/DC 110 V
	S2	AC/DC 220 V
	S3	AC 380 V
	S4	AC 440 V
	S7	DC 24 V
	S8	DC 48 V
	S9	DC 125 V

Ratings

Item	DC (V)	AC (V)
Rated Voltage (Vn)	24	-
	100 ~ 130	100 ~ 130
	200 ~ 250	200 ~ 250
Operating Limits (Vn)	0.7 ~ 1.1	
Power Consumption (VA)	Inrush (300), Steady-State (10)	
Trip Time (ms)	40	

Wire Ratings

Rated Voltage	DC 24		AC/DC 110, 220	
	AWG (mm^2)	Insulation Level (V)	AWG (mm^2)	Insulation Level (V)
Specification	20	600	20	600

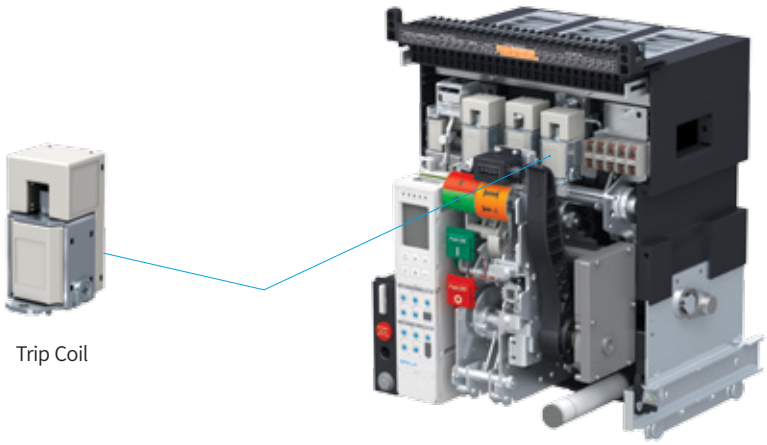

Trip Coil

Accessories

Secondary Trip Coil

- It is a control device which trips a circuit breaker remotely from outside and dual remote trip is possible with an additional installation of trip coil.
- The circuit breaker is tripped by applying power of at least more than 150 ms within the range of 70 ~ 110 % of the rated control voltage by applying power to the control power terminal number (9) and (10).
- When dual trip coil is used, it cannot be used together with UVT coil.
- Add S1 ~ S9 in the order form when ordering the main unit and under the option, add S1 ~ S9 once again.
- It can be purchased separately.
- Use a separate switch externally to apply power to the dual trip coil.

Connection Diagram

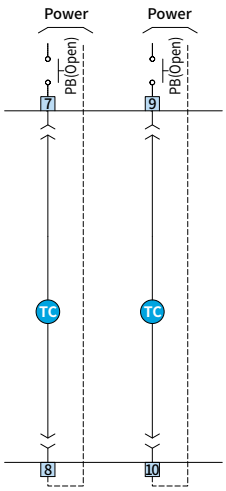

Ordering Method

Name of Accessory	Order Name Placed upon Outgoing	Detailed Specification
Secondary Trip Coil	S1	AC/DC 110 V
	S2	AC/DC 220 V
	S3	AC 380 V
	S4	AC 440 V
	S7	DC 24 V
	S8	DC 48 V
	S9	DC 125 V

Ratings

Item	DC (V)	AC (V)
Rated Voltage (Vn)	24	-
	100 ~ 130	100 ~ 130
	200 ~ 250	200 ~ 250
Operating Limits (Vn)	0.7 ~ 1.1	
Power Consumption (VA)	Inrush (300), Steady-State (10)	
Trip Time (ms)	40	

Wire Ratings

Rated Voltage	DC 24		AC/DC 110, 220	
	AWG (mm^2)	Insulation Level (V)	AWG (mm^2)	Insulation Level (V)
Specification	20	600	20	600

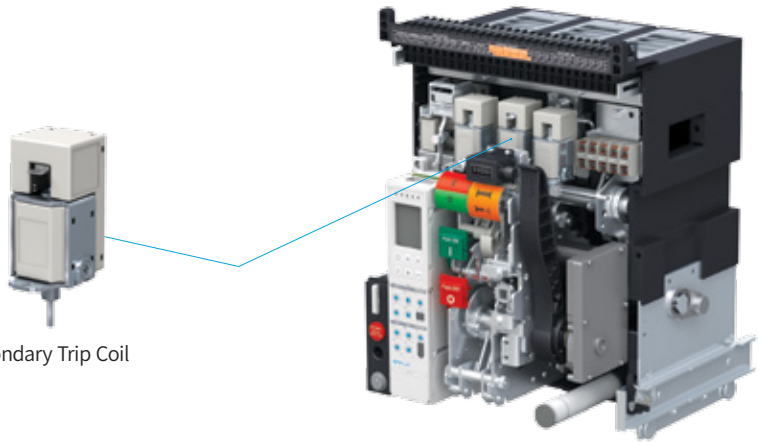

Secondary Trip Coil

Trip Coil Supervision

- A control device which trips a circuit breaker remotely from outside.
- The circuit breaker is tripped by applying power of at least more than 150 ms within the range of 70 ~ 110 % of the rated control voltage by applying power to the control power terminal number (7) and (8).
- When using trip coil supervision, auxiliary contact is 4a3b and when 1a1b is added, it becomes 5a4b. (AUX S/W 43/44, 53/54 cannot be used.)
- In order to monitor the permanent normal status when TCS is closed and tripped, the circuit sequence cannot be created by using the additional 1a1b (Order code AA). (Possibility of contact damage) However, if it is compulsory, select 1a contact within 4a3b for use.
- The trip coil's monitoring output contact No. 59.
- Coil supervision checks not only the circuit's mechanical contact but also the condition of the coil.
- Add T1 ~ T9 in the order form when ordering the main unit.
- It can be purchased separately.

Connection Diagram

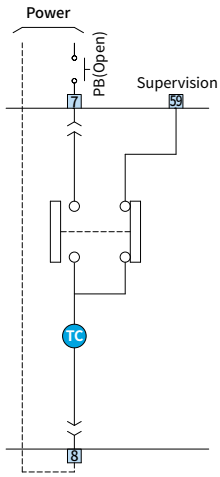

Ordering Method

Name of Accessory	Order Name Placed upon Outgoing	Detailed Specification
Trip Coil Supervision	T1	AC/DC 110 V
	T2	AC/DC 220 V
	T3	AC 380 V
	T4	AC 440 V
	T7	DC 24 V
	T8	DC 48 V
	T9	DC 125 V

Ratings

Item	DC (V)	AC (V)
Rated Voltage (Vn)	24	-
	100 ~ 130	100 ~ 130
	200 ~ 250	200 ~ 250
Operating Limits (Vn)	0.7 ~ 1.1	
Power Consumption (VA)	Inrush (300), Steady-State (10)	
Trip Time (ms)	40	

Wire Ratings

Rated Voltage	DC 24		AC/DC 110, 220	
	AWG (mm^2)	Insulation Level (V)	AWG (mm^2)	Insulation Level (V)
Specification	20	600	20	600

Trip Coil Supervision

Accessories

UVT Coil

- Under-voltage trip device is a device that automatically trips the circuit breaker if the load voltage drops to below 70 % of the standard or to prevent accidents at the load part during a black out.
- Under-voltage trip device is classified into instantaneous and time delay type for use. As for instantaneous type, directly connect to control power terminal number (9), (10) for use and as for time delay type, the Time Delay Controller can be used.
- The circuit breaker trips when the load voltage at the UVT coil becomes less than 35 %, becomes an interlocked state that cannot be closed and when load voltage of 85% is applied, normal closing is possible.
- When instantaneous type of UVT is used, dual trip coil cannot be used.
- When instantaneous type of UVT is used, add U1 ~ U9 in the order form when ordering the main unit.
- It can be purchased separately.

Connection Diagram

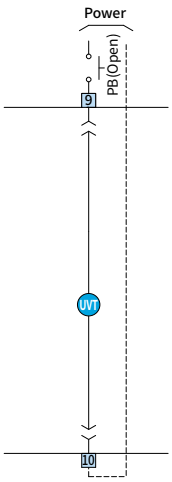

Ordering Method

Name of Accessory	Order Name Placed upon Outgoing	Detailed Specification
UVT Coil	U1	AC/DC 110 V
	U2	AC/DC 220 V
	U3	AC 380 V
	U4	AC 440 V
	U7	DC 24 V
	U8	DC 48 V
	U9	DC 125 V

Ratings

Item	DC (V)	AC (V)
Rated Voltage (Vn)	24	-
	110 (100 ~ 130)	110 (100 ~ 130)
	220 (200 ~ 250)	220 (200 ~ 250)
	-	380
	-	440
Pickup	Above 0.85 Vn	
Drop	Below 0.35 Vn	
Power Consumption (VA)	Inrush (300), Steady-State (10)	
Trip Time (ms)	50	

Wire Ratings

Rated Voltage	DC 24		AC/DC 110, 220		AC 380, 440	
	AWG (mm^2)	Insulation Level (V)	AWG (mm^2)	Insulation Level (V)	AWG (mm^2)	Insulation Level (V)
Specification	20	600	20	600	20	600

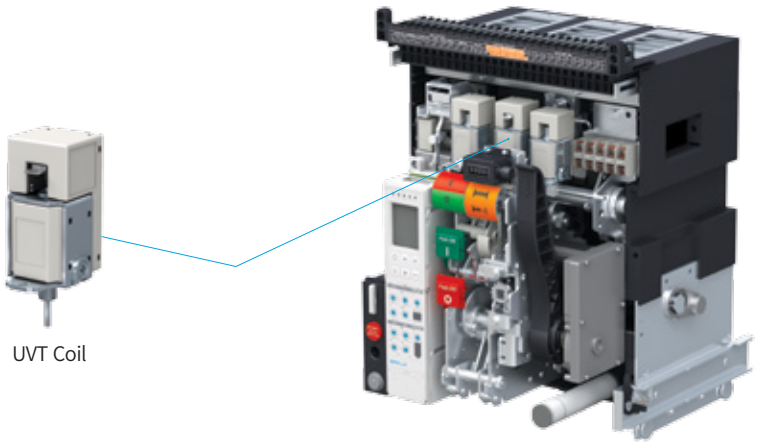

UVT Coil

UVT Time Delay Controller

- Under-voltage trip device is a device that automatically trips the circuit breaker if the load voltage drops to below operating voltage or to prevent accidents at the load part during a black out.
- This device is capable of delaying (0.5, 1.0, 1.5, 3 sec).
- UVT Time Delay Controller can be mounted at the left side of the cradle and the external rail and it can also be mounted at the position desired by the customer.
- Add V1 ~ V9 in the order form when ordering the main unit. Time Delay Controller will be included in the package.
- When purchasing the UVT time delay controller only, place the order for the separate product, HGNS UT1 ~ UT9.
- DC 24 V and DC 48 V are only available in instantaneous type.
- In the event the UVT Time Delay Controller and RCTU are purchased simultaneously, the front mounting can be installed in the front for 1 option designated by the customer. The remaining 1 shall be installed by designating a position in the DIN RAIL inside the panel.

Ordering Method

Name of Accessory	Order Name Placed upon Outgoing	Order Name for Separate Sales (HGNS-)	Detailed Specification
UVT Time Delay Controller	-	HGNS UT1	AC/DC 110 V
	-	HGNS UT2	AC/DC 220 V
	-	HGNS UT3	AC 380 V
	-	HGNS UT4	AC 440 V
	-	HGNS UT9	DC 125 V
UVT Time Delay Controller + UVT Coil	V1	HGNS V1	AC/DC 110 V
	V2	HGNS V2	AC/DC 220 V
	V3	HGNS V3	AC 380 V
	V4	HGNS V4	AC 440 V
	V9	HGNS V9	DC 125 V

UVT Time Delay Controller

Connection Diagram

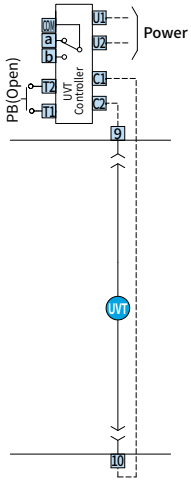

Wiring and Operating Time

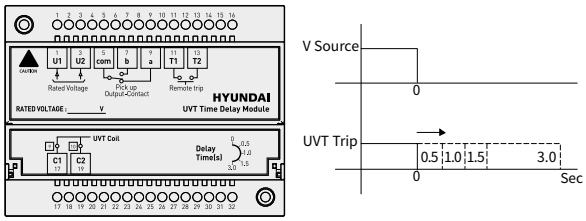

Can be selected from 0.5 – 1.0 – 1.5 – 3 (sec)

Dimension

Unit : mm

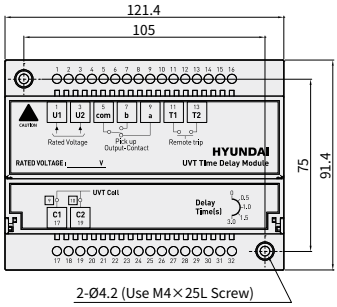

※ 5, 7, 9 switch status is the status when UVT is functioning.

Accessories

AUX Switch

- It is an output contact to remotely monitor the On/Off state of the ACB.
- As for HGS Type, 3a3b is provided and as for HGN Type, 5a5b is provided as standard without separate indication in the order form.
- AUX switch can be expanded up to 6a6b maximum.
  - How to order HGS 5a5b : Add A5 in the order form.
  - How to order HGS/HGN 6a6b : Add AA in the order form.
- When using the monitoring contact for trip coil, 3a3b can be used for the AUX switch and when using the MCR function of OCR, it can be used as 4a3b.
- When short "b" is added, it will be attached to 'b' contacts 51, 52 for outgoing and upon additional mounting, the short "b" sealed and released can be mounted additionally depending on the number of b contacts.
- 5a5b can be purchased separately. Place an order separately as HGNS A5.

Connection

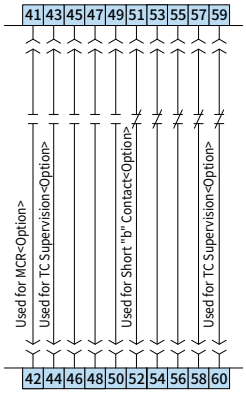

AUX Switch Ratings

Applicable Load	Resistance	Lamp	Inductor	Motor
AC 125 V	5 A	0.7 A	4 A	1.3 A
AC 250 V	5 A	0.5 A	4 A	0.8 A

Wire Specification

Wire Specification	AWG	Insulation Level (V)
Specification	20	300

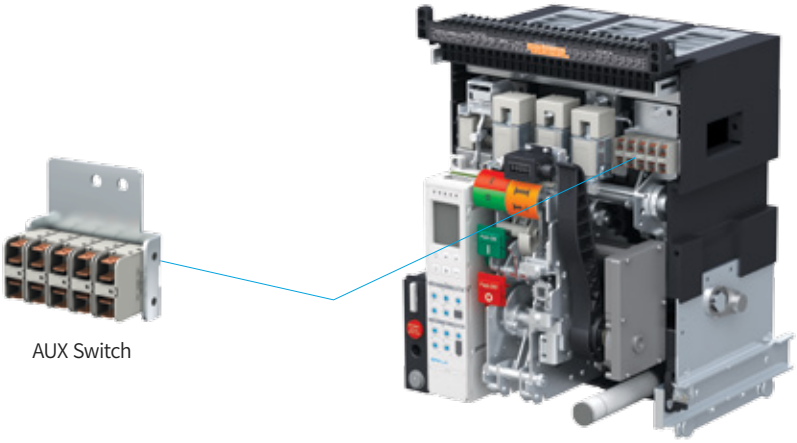

Counter

- It is a device that displays the number of operations, indicating On/Off operation of the circuit breaker in 1 cycle.
- It is a primary component so separate order is unnecessary.

OCR Manual/Auto Reset & Alarm Switch Reset

- It is a device that interlocks the closing of the circuit breaker until the electric line is restored after the user has completely removed the fault factor when a circuit breaker tripped by OCR due to overload or fault current in the electric line. (BR)
- BR : When the circuit breaker functions due to OCR, it interlocks to prevent closing of circuit breaker and is reset manually.
- BA : When the circuit breaker functions due to OCR, the circuit breaker's status is indicated as output contact 2a other than the interlock feature and this output contact is reset manually.
- BH : When the circuit breaker functions due to OCR, the circuit breaker's status is indicated as output contact high capacity switch other than the interlock feature and this output contact is reset manually.
- As a product mounted in the main unit, add BR/BA/BH in the order form when ordering the main unit.

Ordering Method

Name of Accessory	Order Name Placed upon Outgoing	Detailed Specification
OCR Manual Reset	BR	Interlock Manual Reset
OCR Manual Reset + Alarm S/W Reset	BA	Interlock Manual Reset + Alarm S/W Reset
OCR Manual Reset + High Capacity Alarm S/W Reset (1C)	BH	Interlock Manual Reset + Alarm S/W Reset (High Capacity DC 3 A)

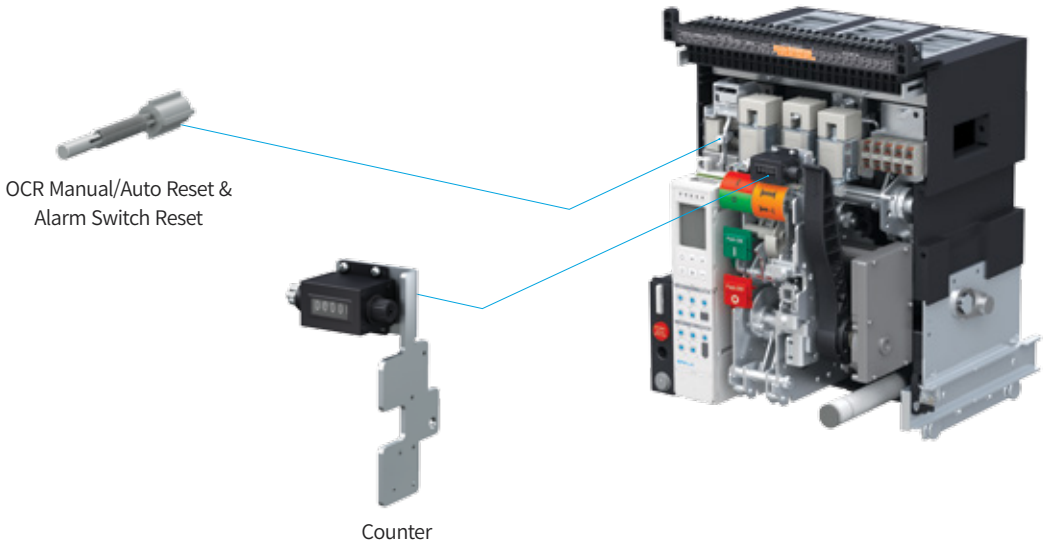

Accessories

Position Switch

- This switch, mounted at the side of the cradle, displays the position of ACB during draw-out.
- The position of Inserted/Isolated/Test/Connected can be displayed.
- Only one switch is applicable and it can only be mounted at the right side of the cradle.
- It can be purchased separately.

AUX Switch Ratings

Applicable Load	Resistance	Lamp	Inductor	Motor
AC 125 V	10 A	1.5 A	6 A	2 A
DC 30 V	6 A	3 A	6 A	3 A
DC 125 V	0.6 A	0.1 A	0.6 A	0.1 A
DC 250 V	0.3 A	0.05 A	0.3 A	0.05 A

Ordering Method

Order Name		Specification of Switch Output					Mounting Position
		Composition	Insert	Isol	Test	Connect	
AQ	HGNS AQ	Test 1C/Connect 1C	×	×	● (1C)	● (1C)	Right Side of Cradle
AR	HGNS AR	Connect 2C	×	×	×	● (2C)	
AS	HGNS AS	Test 2C	×	×	● (2C)	×	
AT	HGNS AT	Isol 1C/Insert 1C	● (1C)	● (1C)	×	×	
AU	HGNS AU	Insert 2C	● (2C)	×	×	×	
AV	HGNS AV	Isol 2C	×	● (2C)	×	×	
PQ	HGNS PQ	Isol 1C/Insert 1C/Test 1C/Connect 1C	● (1C)	● (1C)	● (1C)	● (1C)	
PS	HGNS PS	Isol 1C/Test 1C/Connect 2C	×	● (1C)	● (1C)	● (2C)	
P4	HGNS P4	Test 2C/Connect 2C	×	×	● (2C)	● (2C)	
PT	HGNS PT	Test 4C	×	×	● (4C)	×	
PR	HGNS PR	Insert 1C/Isol 1C/Test 3C/Connect 3C	● (1C)	● (1C)	● (3C)	● (3C)	
P8	HGNS P8	Insert 2C/Isol 2C/Test 2C/Connect 2C	● (2C)	● (2C)	● (2C)	● (2C)	

Operating Sequence of Position Switch Operation Circuit

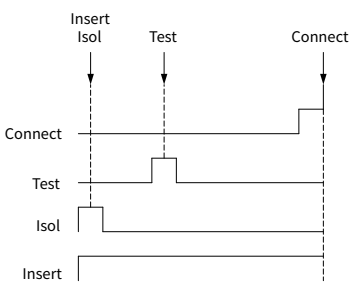

Connection Diagram

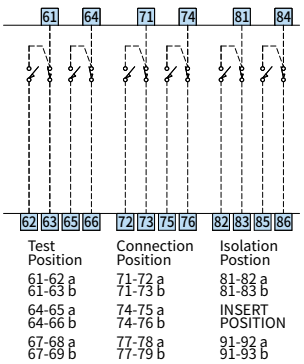

Dimension

Unit : mm

Lifting Lug

- It is a component that is used for transporting the circuit breaker.
- It can be hung to the handle at the side of the cradle, side of the arc shield and the main unit and the product can be moved by a crane or a person.
- When handling all the products, use the crane and in case of transporting independently using only the crane in case of products below 3,200 A, the products must be transported in accordance with the safety regulations.
- As a product sold separately, place an order for HGNS AL.

Dummy ACB

- The dummy ACB is applied as emergency in case of a long-term black out for repair when a malfunction has occurred in a device when using the ACB. It is a frame used to conduct ACB's function temporarily.
- As the circuit breaker is closed, the primary power must be removed in the electric line when connecting the Dummy ACB.
- Each frame is provided in the maximum rated current.
- It can be ordered separately. Make a separate inquiry when placing the order.

Ordering Method

Name of Accessory	Detailed Specification
Dummy ACB	A Frame, 630 ~ 2,000 A, 3P
	A Frame, 630 ~ 2,000 A, 4P
	B Frame, 2,000 ~ 4,000 A, 3P
	B Frame, 2,000 ~ 4,000 A, 4P
	C Frame, 4,000 ~ 5,000 A, 3P
	C Frame, 4,000 ~ 5,000 A, 4P
	D Frame, 4,000 ~ 6,300 A, 3P
	D Frame, 4,000 ~ 6,300 A, 4P

Lifting Lug

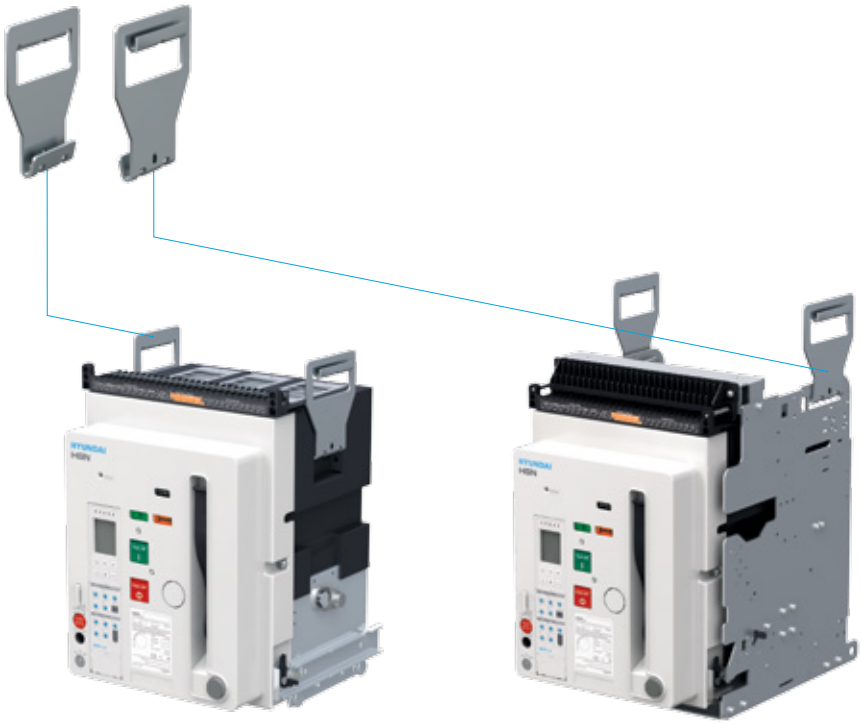

Accessories

Mechanical Interlock

- MI is a device that mechanically interlocks the closing and tripping of each circuit breaker by connecting 2 or 3 circuit breakers.
- The MI is operated by a combination of the MI unit and the components of the interlock that is installed inside the main unit.
- The MI unit is a separate product and it is a device that is mounted additionally after the ACB has to be installed in the panel.
- When placing the order for the main unit, add B0 in the order from and only the component inside the interlock is mounted inside the main unit for release and as for the external mounting kit, place an additional order as a separate product.
- MI wire should be connected under 2 m between ACBs.
- In order to install, a square hole of 100×200 (mm) is required.

Mechanical Interlock

Ordering Method

Name of Accessory	Order Name for Separate Sales (HGNS-)	Accessory Spec.
Mechanical Interlock	HGNS DWB1	A & B & C & D Frame Draw-Out (Fixed) Type 2 Way MI (External Mounting Kit Only)
	HGNS DWB2	A & B & C & D Frame Draw-Out (Fixed) Type 3 Way MI (External Mounting Kit Only)
	HGNS FWB1	A & C Frame Fixed Type 2 Way MI (External Mounting Kit Only)
	HGNS FWB2	A & C Frame Fixed Type 3 Way MI (External Mounting Kit Only)
	HGNS B0DA	A Frame Interlock Part (B0)
	HGNS B0DB	B Frame Interlock Part (B0)
	HGNS B0DC3	C Frame 3P Interlock Part (B0)
	HGNS B0DC4	C Frame 4P Interlock Part (B0)
	HGNS B0DD3	D Frame 3P Interlock Part (B0)
	HGNS B0DD4	D Frame 4P Interlock Part (B0)
	HGNS B0FA	A Frame Interlock Part (B0) + Fixed Type of Installation Bracket
	HGNS B0FB	B Frame Interlock Part (B0) + Fixed Type of Installation Bracket
	HGNS B0FC3	C Frame 3P Interlock Part (B0) + Fixed Type of Installation Bracket
	HGNS B0FC4	C Frame 4P Interlock Part (B0) + Fixed Type of Installation Bracket
	HGNS B0FD3	D Frame 3P Interlock Part (B0) + Fixed Type of Installation Bracket
	HGNS B0FD4	D Frame 4P Interlock Part (B0) + Fixed Type of Installation Bracket
	HGNS DWB1A	A Frame Draw-Out Type 2 Way MI + Interlock Part (B0)
	HGNS DWB2A	A Frame Draw-Out Type 3 Way MI + Interlock Part (B0)
	HGNS DWB1B	B Frame Draw-Out Type 2 Way MI + Interlock Part (B0)
	HGNS DWB2B	B Frame Draw-Out Type 3 Way MI + Interlock Part (B0)
	HGNS DWB1C3	C Frame 3P Draw-Out 2 Way MI + Interlock Part (B0)
	HGNS DWB1C4	C Frame 4P Draw-Out 2 Way MI + Interlock Part (B0)

Name of Accessory	Order Name for Separate Sales (HGNS-)	Accessory Spec.
Mechanical Interlock	HGNS DWB2C3	C Frame 3P Draw-Out 3 Way MI + Interlock Part (B0)
	HGNS DWB2C4	C Frame 4P Draw-Out 3 Way MI + Interlock Part (B0)
	HGNS DWB1D3	D Frame 3P Draw-Out 2 Way MI + Interlock Part (B0)
	HGNS DWB1D4	D Frame 4P Draw-Out 2 Way MI + Interlock Part (B0)
	HGNS DWB2D3	D Frame 3P Draw-Out 3 Way MI + Interlock Part (B0)
	HGNS DWB2D4	D Frame 4P Draw-Out 3 Way MI + Interlock Part (B0)
	HGNS FWB1A	A Frame Fixed Type 2 Way MI + Interlock Part (B0)
	HGNS FWB2A	A Frame Fixed Type 3 Way MI + Interlock Part (B0)
	HGNS FWB1B	B Frame Fixed Type 2 Way MI + Interlock Part (B0)
	HGNS FWB2B	B Frame Fixed Type 3 Way MI + Interlock Part (B0)
	HGNS FWB1C3	C Frame 3P Fixed Type 2 Way MI + Interlock Part (B0)
	HGNS FWB1C4	C Frame 4P Fixed Type 2 Way MI + Interlock Part (B0)
	HGNS FWB2C3	C Frame 3P Fixed Type 3 Way MI + Interlock Part (B0)
	HGNS FWB2C4	C Frame 4P Fixed Type 3 Way MI + Interlock Part (B0)
	HGNS FWB1D3	D Frame 3P Fixed Type 2 Way MI + Interlock Part (B0)
	HGNS FWB1D4	D Frame 4P Fixed Type 2 Way MI + Interlock Part (B0)
	HGNS FWB2D3	D Frame 3P Fixed Type 3 Way MI + Interlock Part (B0)
	HGNS FWB2D4	D Frame 4P Fixed Type 3 Way MI + Interlock Part (B0)

Key Lock

- It is a device that maintains the interlock condition to prevent electric/manual closing when the circuit breaker is open.
- When the key has been used to unlock, the electric/manual On/Off operation is possible. When the key has been removed from the circuit breaker, it becomes interlocked. When the key has been used to lock, the Off button has to be pressed to turn the key to the lock position.
- As a product mounted on the main unit, add AB in the order form when placing an order for the main unit.

Key Lock & Key Interlock

- 3 circuit breakers mounted with the key lock device for preventing On can be used to make up the system. Only 2 circuit breakers can be allowed to close using 2 keys and the remaining 1 unit can be interlocked to provide stable load.

Circuit Breaker 3 cannot be closed

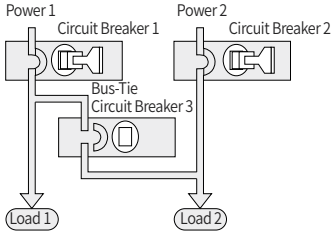

Circuit Breaker 2 cannot be closed

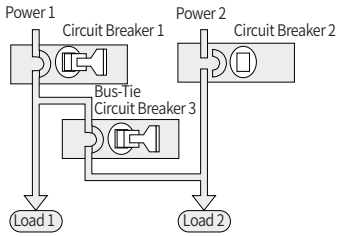

Circuit Breaker 1 cannot be closed

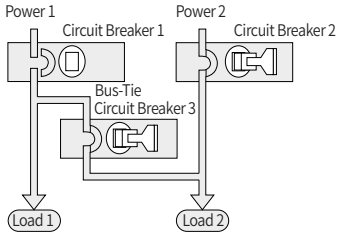

※ Example : Parallel feed at 2 power is prevented in case bus-tie circuit breaker is used

Accessories

On/Off Button Lock

- It is a safety device that prevents manual On/Off operation caused by the user's mistaken. The buttons are covered with a plastic cover to prevent arbitrary operation of manual close/trip button and padlock is used.
- As a product mounted on the main unit, add AM in the order form when placing an order for the main unit.
- Padlock is not provided by our company. (Ø5 ~ Ø8)

DR Device Unit & Position Pad Lock

- As for the draw-out type of circuit breaker, DR device is mounted on the main unit.
- DR device is comprised of a groove for inserting draw-out handle, draw-out push button, position indicator and a padlock device.
- As for the padlock device, it is provided as a standard safety device that prevents arbitrary draw-out by using a padlock in the connection/test/isolated position but the padlock is not provided by our company. (Ø5 ~ Ø8)
- It can be purchased separately.

On/Off Button Lock

DR Device Unit &
Position Pad Lock

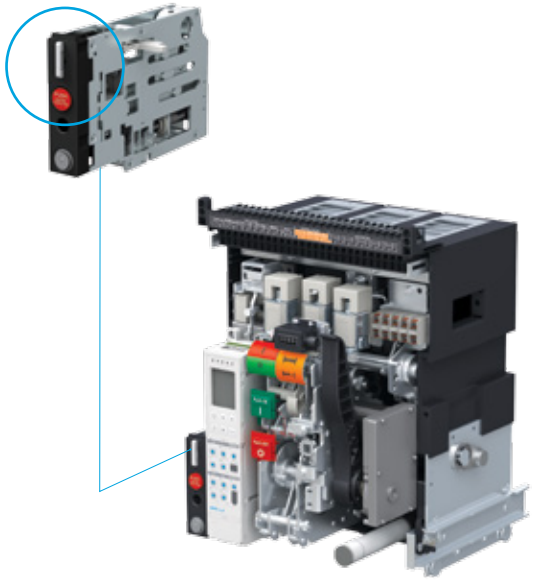

Auto Connection Type & Manual Control Plug Type

- As for the method of connecting the control power, auto connection type in which the control power is automatically connected/isolated when the main unit is drawn out and manual connection type in which the user directly inserts the connector with the control power connected to the main unit are available.
- Fixed type is provided with manual control plug type as standard so that type of connection terminal of the main power can be designated without separate indication.
- When completely removing the manual connection type of product from the cradle, the main unit has to be separated after removing the connector.
- As a product mounted on the cradle, select A for automatic connection type and J for manual connection type.

Short “b” Contact

- When the circuit breaker is moved from the Connected position to the Test position, the auxiliary contact AUX “b” is disconnected to maintain the external control circuit in normal, ultimately maintaining an accurate sequence operation.
  As for the number of shorting “b” contact, it corresponds to the number of AUX “b” (5b).
- Upon outgoing, only 1b (51, 52) is mounted and as for the remaining 4b, it is sealed together with the manual pack so it can be mounted as much as needed for use.
- As a product mounted on the main unit, add AK in the order form when placing an order for the main unit.

Indication of Contact Status
(When AUX “b” and Short “b” are Connected)

ACB Operating / ACB Position	ACB Close (AUX “b” Off)	ACB Open (AUX “b” On)
Connected Position (Short “b” Off)	OFF AUX "b" Short "b"	ON AUX "b" Short "b"
Test Position (Short “b” On)	OFF AUX "b" Short "b"	ON AUX "b" Short "b"

Manual Control Plug Type

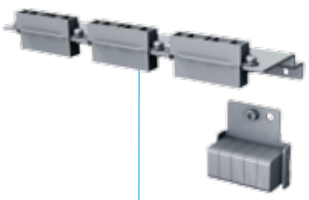

Auto Control Plug Type

Short “b” Contact

Accessories

Miss-Insertion Preventor

- Although the external size is equivalent, in case the rating does not conform when the main unit of the circuit breaker (ACB) is inserted in the cradle in the composition of another circuit breaker, this device prevents it from being inserted.
- It is comprised based on the CT rated current.
- Each component is mounted on the main unit and cradle respectively. Add AW in the main unit and cradle's order form respectively when placing the order.

Ordering Method

CT Rating	Cradle	ACB
0 = OCR Non Mounting	ADEG	236
I = 80 A	AEFG	234
B = 160 A	ADFG	235
O = 200 A	ADEF	237
V = 320 A	ABEF	347
E = 400 A	ABDG	356
T = 630 A	ABDF	357
H = 800 A	ABDE	367
J = 1,000 A	ABCG	456
K = 1,250 A	ABCF	457
L = 1,600 A	ABCE	467
M = 2,000 A	ABCD	567
N = 2,500 A	BCDE	167
P = 3,200 A	BCDF	157
Q = 4,000 A	BCDG	156
S = 5,000 A	BCEF	147
X = 6,300 A	ABEG	346

Part's Mounting Position per Rated Current

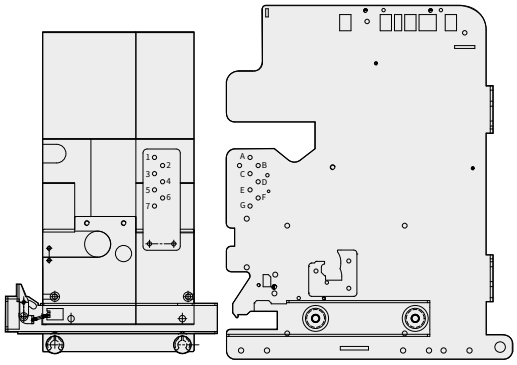

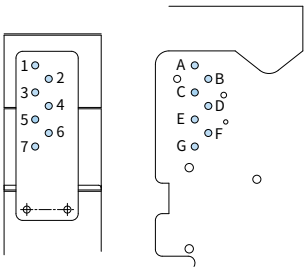

Miss-Insertion Preventer

Phase Insulation Barrier

- Phase insulation barrier is a part installed between phases that prevents short circuit between phases in advance by closing the arc which may occur between phases.
- 2 ea are mounted for 3P Type and 3 ea are mounted for 4P Type and as they are sold individually, select the required quantity when placing the order.
- As a product sold separately, place an order in HGNS P BAR.

Phase Insulation Barrier

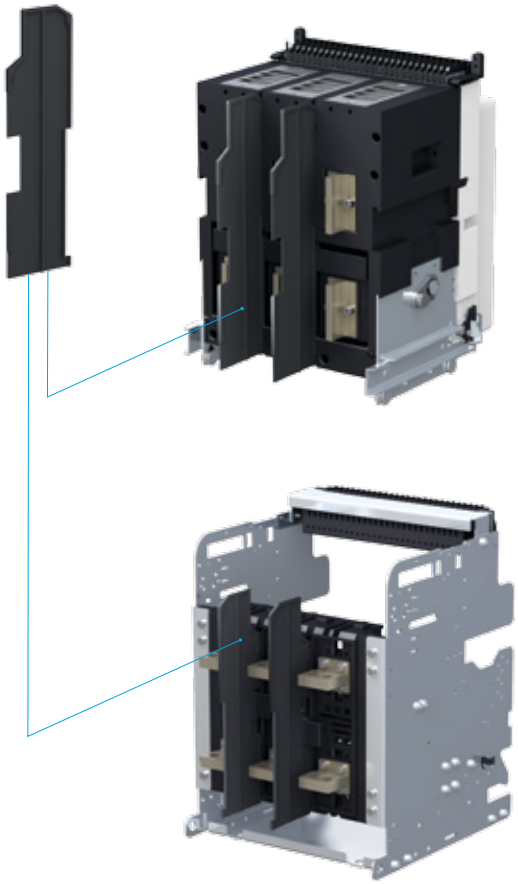

Safety Shutter & Shutter Lock

- It is a safety device that prevents the contact between the conductor part and the front part when the main unit of the circuit breaker mounted on the cradle is drawn out.
- The structure automatically opens and closes when the circuit breaker is drawn out and it comes with a shutter lock device that prevents it from opening when the shutter is closed in the event the main unit is drawn out. The padlock is not provided by our company. (Ø5 ~ Ø8)
- As for the shutter, the power side and load side operates separately, each equipped with an operation device and they can be locked individually.
- As a product mounted on the cradle, add AE in the order form when placing the order for the cradle.

Ordering Method

Name of Accessory	Order Name Placed upon Outgoing	Order Name for Separate Sales (HGNS-)	Detailed Specification
Safety Shutter	AE	HGNS AEA3	A Frame, 630 ~ 2,000 A, 3P
		HGNS AEA4	A Frame, 630 ~ 2,000 A, 4P
		HGNS AEB3	B Frame, 2,000 ~ 4,000 A, 3P
		HGNS AEB4	B Frame, 2,000 ~ 4,000 A, 4P
		HGNS AEC3	C Frame, 4,000 ~ 5,000 A, 3P
		HGNS AEC4	C Frame, 4,000 ~ 5,000 A, 4P
		HGNS AED3	D Frame, 4,000 ~ 6,300 A, 3P
		HGNS AED4	D Frame, 4,000 ~ 6,300 A, 4P

Safety Shutter & Shutter Lock

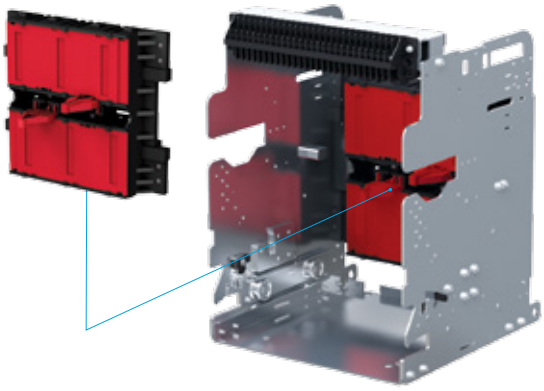

Accessories

Fixing Block

- It is a safety device for reinforcement in order to prevent abnormal operation caused by vibration.
- It is capable of simultaneously fixing the main unit and the cradle and reinforcing the cradles and panel supporters.
- Each component is mounted on the main unit and the cradle. Add AF in the respective order form of the main unit and cradle when placing the order.

Control Terminal Protection Cover

- It is a safety cover that is placed on the connection terminal to prevent contact with external foreign substances or physical contact after the control power has been connected to the automatic connection type of terminal.
- It cannot be applied to fixed type ACB and draw-out type ACB with manual connection terminal.
- As a product mounted on the cradle, add BC when placing an order for the draw-out type with automatic connection type.

Terminal Bus Bar (Draw-Out Type)

- HG-Series ACB is compatible with various type of terminal bus bar such as vertical, horizontal, front and others depending on the type of bus bar of the customer's equipment and the terminal can be changed to A frame (630 ~ 1,600 A) and B frame (630 ~ 3,200 A).
- The front type of terminal bus bar is released separately from the main unit and cradle so it needs to be installed at site. In addition, the front type of terminal bus bar requires separate order so refer to the following table when placing the order.
- As for the front type of terminal bus bar that is provided separately for the B frame 2,000/2,500 A, 3,200 A terminal is provided.
- Front type of terminal bus bar is sold separately.

Mixed Type

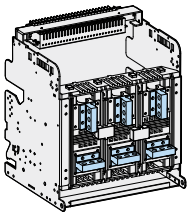

(Upper) Vertical Type
+
(Lower) Horizontal Type

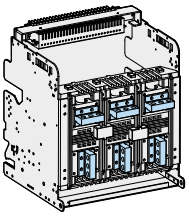

(Upper) Horizontal Type
+
(Lower) Vertical Type

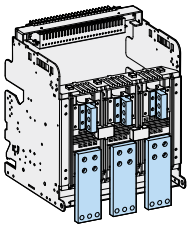

(Upper) Vertical Type
+
(Lower) Front Type

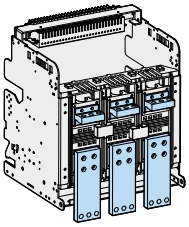

(Upper) Horizontal Type
+
(Lower) Front Type

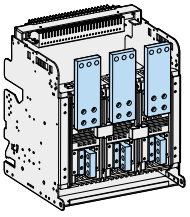

(Upper) Front Type
+
(Lower) Vertical Type

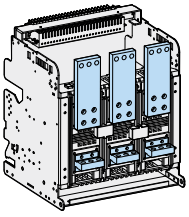

(Upper) Front Type
+
(Lower) Horizontal Type

Standard Type

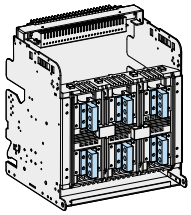

Vertical Type

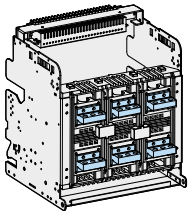

Horizontal Type

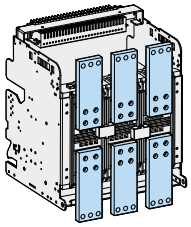

Front Type

Ordering Method

Name of Accessory	Order Name for Separate Sales (HGNS-)	Detailed Specification
Connection Terminal (Draw-Out Type)	HGNS HVA3	Up-Down Horizontal Type/Up-Down Vertical Type 6 ea (A Frame, 630 ~ 1,600 A, 3P)
	HGNS HVA4	Up-Down Horizontal Type/Up-Down Vertical Type 8 ea (A Frame, 630 ~ 1,600 A, 4P)
	HGNS HVB3	Up-Down Horizontal Type/Up-Down Vertical Type 6 ea (B Frame, 2,000 ~ 3,200 A, 3P)
	HGNS HVB4	Up-Down Horizontal Type/Up-Down Vertical Type 8 ea (B Frame, 2,000 ~ 3,200 A, 4P)
	HGNS FRA3	Up-Down Front Type 6 ea (A Frame, 630 ~ 1,600 A, 3P)
	HGNS FRA4	Up-Down Front Type 8 ea (A Frame, 630 ~ 1,600 A, 4P)
	HGNS FRB3	Up-Down Front Type 6 ea (B Frame, 2,000 ~ 3,200 A, 3P)
	HGNS FRB4	Up-Down Front Type 8 ea (B Frame, 2,000 ~ 3,200 A, 4P)
	HGNS FHVA3	Up-Down Front Type 3 ea + Horizontal Type/Vertical Type 3 ea (A Frame, 630 ~ 1,600 A, 3P)
	HGNS FHVA4	Up-Down Front Type 4 ea + Horizontal Type/Vertical Type 4 ea (A Frame, 630 ~ 1,600 A, 4P)
	HGNS FHVB3	Up-Down Front Type 3 ea + Horizontal Type/Vertical Type 3 ea (B Frame, 2,000 ~ 3,200 A, 3P)
	HGNS FHVB4	Up-Down Front Type 4 ea + Horizontal Type/Vertical Type 4 ea (B Frame, 2,000 ~ 3,200 A, 4P)

Accessories

Arc Shield

- Arc which occurs while breaking the circuit breaker is extinguished through the arc chamber within the main unit or as the residual arc is discharged to the external upper part, the basic distance required for insulation has to be maintained.
- When mounting the arc shield, the insulation distance can be minimized to “0” due to the residual arc discharged to the upper part.
- When mounting the arc shield, it can be piled in 4 stories.
- As a product mounted on the cradle, add AX in the order form when placing the order for the cradle.

Ordering Method

Name of Accessory	Order Name Placed upon Outgoing	Order Name for Separate Sales (HGNS-)	Detailed Specification
Arc Shield	AX	HGNS AXA3	A Frame, 630 ~ 2,000 A, 3P
		HGNS AXA4	A Frame, 630 ~ 2,000 A, 4P
		HGNS AXB3	B Frame, 2,000 ~ 4,000 A, 3P
		HGNS AXB4	B Frame, 2,000 ~ 4,000 A, 4P
		HGNS AXC3	C Frame, 4,000 ~ 5,000 A, 3P
		HGNS AXC4	C Frame, 4,000 ~ 5,000 A, 4P
		HGNS AXD3	D Frame, 4,000 ~ 6,300 A, 3P
		HGNS AXD4	D Frame, 4,000 ~ 6,300 A, 4P

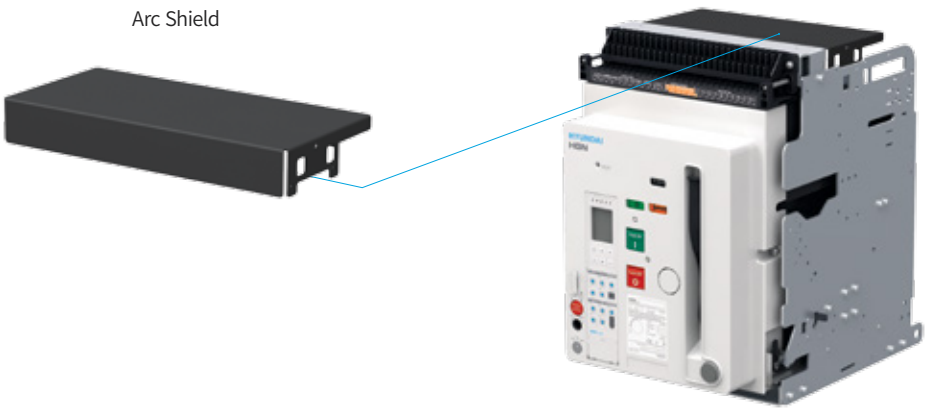

RCTU

- This product is a module that closes and prevents the ACB remotely by using communication.
- This product uses Modbus/RS-485 communication.
- Close/Open control of ACB assures its reliability through SBO (Select Before Operation) function.
- It can be used together with the temperature monitoring device module and as for the detailed rating, refer to the table in Page 98.

Contact Specification

For ACB Control	Applicable Range
Contact Ratings	10 A 240 VAC, 30 VDC
Max Switching Power	10 A 240 VAC, 30 VDC

Dimension

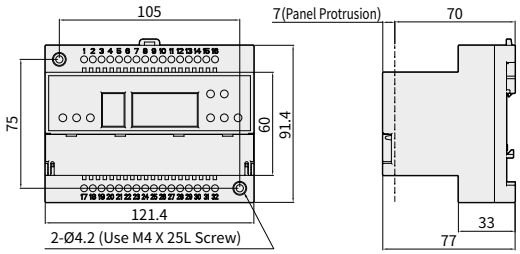

Temperature Monitoring Device Module

- This product detects the bus bar temperature of the ACB through the temperature sensor installed on the temporary location of ACB and displays it.
- Up to 3 temperature sensor can be installed and it can trigger the designated temperature alarm through a separate temperature contact.
- It supports Modbus/RS–485 communication and the each channel's temperature value and the maximum temperature value out of the channel are transmitted through communication.
- The alarm for operating temperature value can be set through communication.
- The temperature value of each channel can be checked through the Segment LED mounted at the front and once it reaches the temperature alarm set by the user, the temperature value of the relevant channel is displayed.
- As a product sold separately, it can be installed in the ACB and the internal panel. As a module that can be used together with the remote breaking module, refer to the table on Page 98.
- This product is an optional product of remote breaking module and it is only sold as a combination type with the remote breaking module.

Contact Specification

Temperature Alarm	Applicable Range
Contact Ratings	10 A 120 VAC/5 A 240 VAC, 5 A 30 VDC
Max Switching Power	1,200 VA, 150 W

Remote Control Temperature Unit (RCTU) /
Temperature Monitoring Device Module

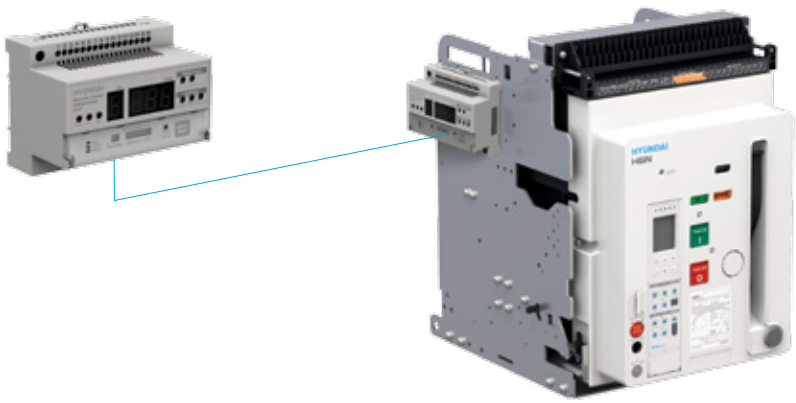

Accessories

Temperature Sensor Unit

- Detailed specification of Remote Control Temperature Unit (RCTU)
  - RCTU is equipped with a contact that enables remote insertion/disconnection of ACB using communication. Through the 4 temperature channels, the temperature of ACB is measured.
  - RCTU supports RS-485/Modbus-RTU communication.
  - Insertion/disconnection control of ACB assures its reliability through SBO (Select Before Operation) function.
  - If the temperature rises over the value set by the user through communication, it can be checked through the alarm contacting point (Additional connection required).
  - The temperature of ACB can be checked through the Segment LED at the front.
  - RCTU can be installed in the ACB's cradle or panel.
  - RCU module is equipped with the same function other than the temperature monitoring function in the RCTU module.

Status Indicating LED		Details
RCTU Status	Run LED	RCTU Operation Status LED
	Com LED	Communication LED
	Temp. Alarm LED	Temperature Alarm LED
	Alarm DO LED	Temperature Alarm Output Contact LED
Universal Digital Input	DI1	Dry Contact (5 V)
	DI2	Dry Contact (5 V)
Temperature Alarm	CB Close	ACB Close Status LED
	CB Open	ACB Open Status LED
	CB Error	ACB Close/Open Terminal Non Contacted and Control Error Status

Terminal Block

No.	Definition	No.	Definition
1	DI1 +	17	NTC IR Sensor
2	DI1 -	18	NTC IR Sensor
3	DI2 +	19	IR Sensor 3 AOR (Black)
4	DI2 -	20	IR Sensor 3 GND (Green)
5	DI Close +	21	IR Sensor 3 AOT (Yellow)
6	DI Close -	22	IR Sensor 3 Power (Red)
7	DI Open +	23	IR Sensor 2 AOR (Black)
8	DI Open -	25	IR Sensor 2 GND (Green)
9	DO Temp. Alarm	25	IR Sensor 2 AOT (Yellow)
10	DO Temp. Alarm	26	IR Sensor 2 Power (Red)
11	DO Close	27	IR Sensor 1 AOR (Black)
12	DO Close	28	IR Sensor 1 GND (Green)
13	DO Open	29	IR Sensor 1 AOT (Yellow)
14	DO Open	30	IR Sensor 1 Power (Red)
15	AC Power	31	RS485 (-)
16	AC Power	32	RS485 (+)

Contact Specification

Item		Applicable Range
ACB Control	Contact Ratings	10 A 240 VAC, 30 VDC
	Max Switching Power	2,400 VA, 300 W
Temperature Alarm	Contact Ratings	10 A 120 VAC/5 A 240 VAC 5 A 30 VDC
	Max Switching Power	1,200 VA, 150 W

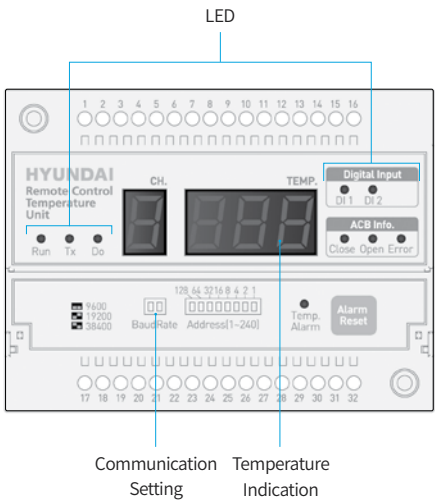

Caution

1. IR sensor differs in value by the reflectivity of metal surface. Measuring point should be varnished or painted with matt black paint depending on material.
2. Measuring point and IR distance differ measuring spot size by D:S ratio. This sensor has 8:1 scale.
3. IR sensor should be indicated at the point where there is no gloss surface.
4. IR sensor distance : The ratio of measurement locations is 8:1. The diameter measured by the IR sensor is 1 cm when it is 8 cm away from the measurement position.

Block Diagram

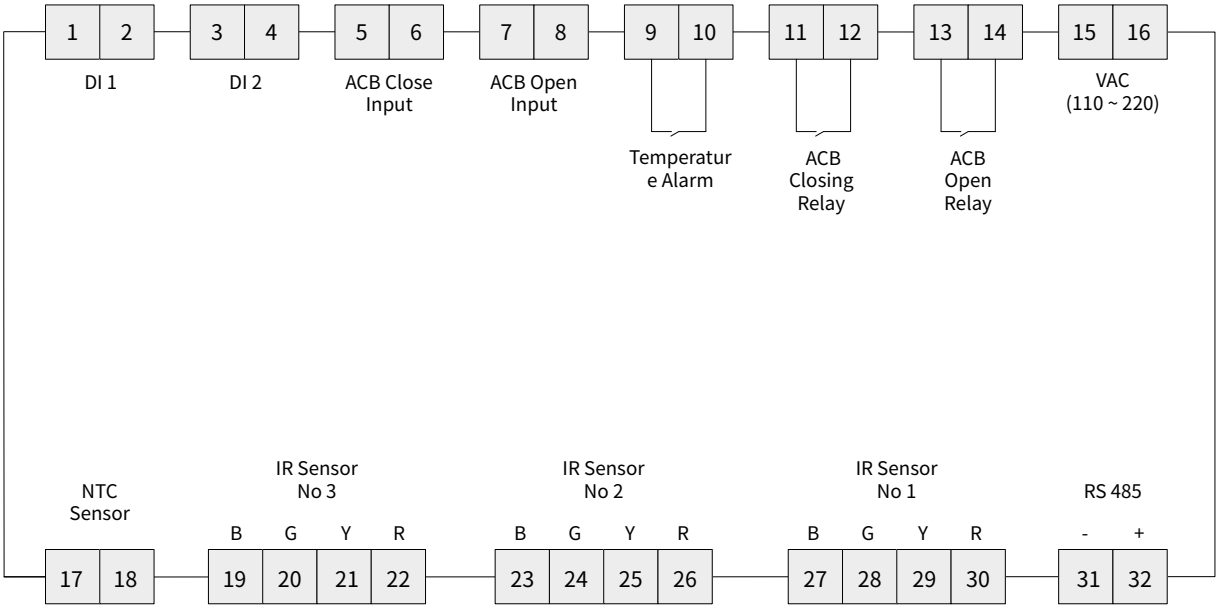

Accessories

Temperature Sensor

- The temperature sensor is mounted on the designated position as standard but another location can be designated by the user.
- It is sold separately.

Ordering Method

Name of Accessory	Order Name for Separate Sales (HGNS-)	Detailed Specification
Temp Sensor	HGNS TSN	Temperature Sensor
Remote Control Trip Module	HGNS RCU	Remote Control Trip Module
	HGNS RCTU	Remote Control Trip Module + Temperature Monitoring Device Module
	HGNS RCTUN	Remote Control Trip Module + Temperature Monitoring Device Module + Temperature Sensor

Physical Medium

- Shielded Twister Pair cable used

Caution

1. The use of Shielded Twisted Pair cable is recommended.
2. The maximum length for connection can be 1 km but the communication length may become shorter depending on the installation environment and the number of device connected to the communication line.
3. The communication length may differ depending on the communication speed.

Communication Specification

- RS-485 (Modbus-RTU)
- Baud Rate : 9,600, 19,200, 38,400 bps (Default : 9,600)
- Data Bits : 8 bits
- Parity : None
- Stop Bits : 1 bits

Address Setting : 1 ~ 240

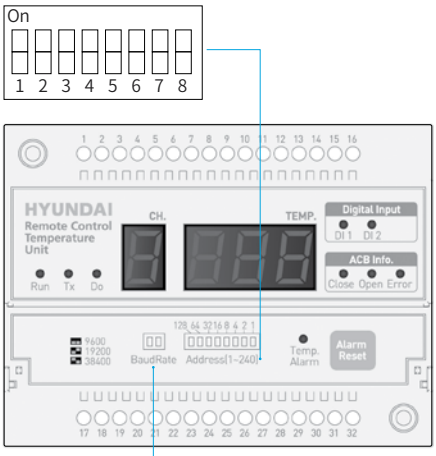

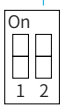

Baud Rate Setting

Set		Description
Off	Off	9,600
Off	On	19,200
On	Off	38,400

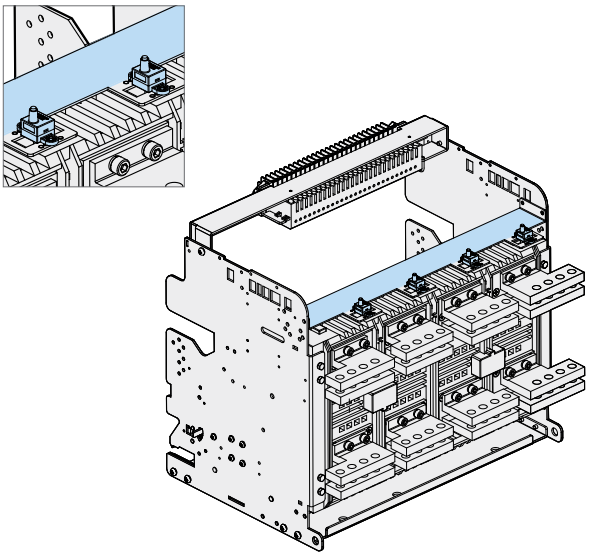

IR (Infrared Sensor) Specification (Option)

IR Sensor

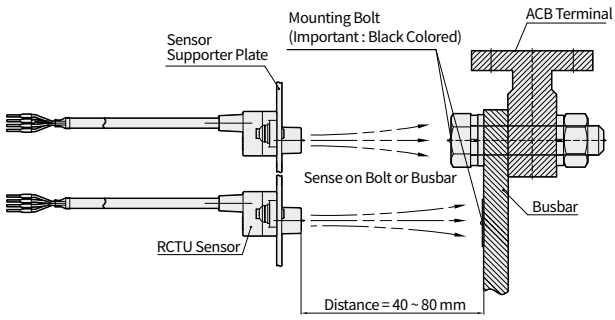

Example of IR Sensor Application

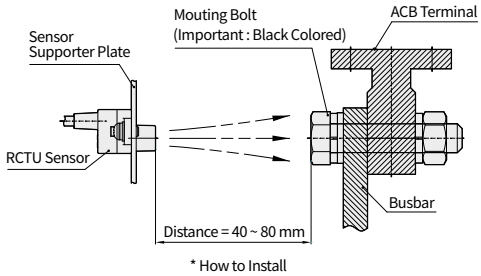

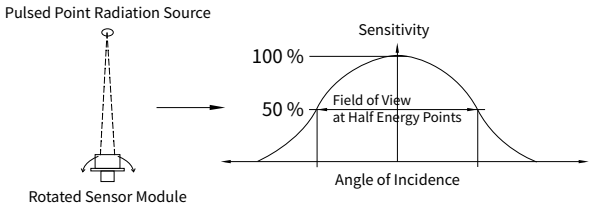

Parameter	Limits			Unit	Conditions
	Min	Typ	Max		
Cable Length		3		m	
Optical Axis	- 3.5	0	+ 3.5	Degree	Sensor View Direction
Field of View		6	11	Degree	50 % Energy Points
D:S Ratio		8:1			Distance (mm) to Spot Size

IR Sensor Measurement

- IR temperature sensor has to be installed with sufficient insulation distance from the measuring point.
- The recommended distance between the measuring point and the temperature sensor is 50 ~ 80 mm.
- The measuring point must be a surface without reflection due to the characteristics of the IR sensor and black matte painting is recommended at the measuring point.

⚠ Caution

1. As for the IR sensor, the measurement value differs depending on the reflection rate of the metal surface. Measuring point with surfaced painted with matte black or varnish other than metallic varnishing must be measured.
2. As for the surface to be measured and the IR distance, the size of measurement area differs depending on the D:S Ratio. This sensor has a ratio of 8:1.

Accessories

Temperature Sensor

Control Contact Connection

ACB Information Pin

a Contact	b Contact	Test	Connection
45, 47, 49	55, 57	61	71
46, 48, 50	56, 58	62	72

ACB Open/Close Control Pin

CC	TC
3	7
4	8

HGN

Example : When DI input is used as ACB position

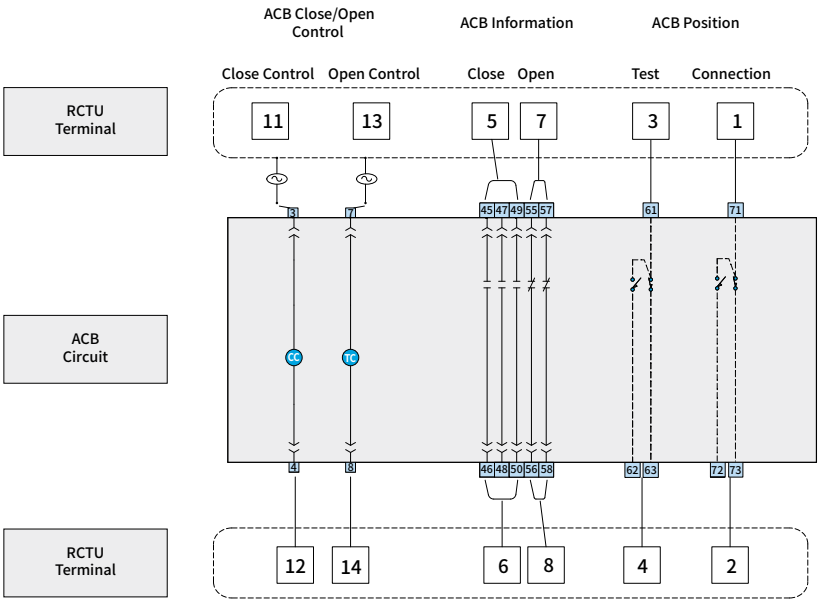

INTC Thermistor Specification (Option)

- The electrical resistance value changes depending on the ambient temperature and by measuring the change in value, the temperature is displayed.
- The length of the cable is 1,000 mm and it measures the value of ambient temperature where in the RCTU has been installed.
- The range that can be measured is -50 ~ 250 °C.

Parameter	Content	Conditions
Length of Cable	1,000 mm	
Resistance Value	10 kΩ ± 1 %	Ambient Temperature of 25 °C

OCR Portable Checker

- OCR Portable Checker (Hereinafter referred to as the Checker) executes the relay test operation of the OCR (Hereinafter referred to as the OCR) (Long time/short time delay/ instantaneous/ground fault).
- It is possible to set the current size and phases using button for the OCR test.
- The relay test factors can be set through the front LCD and the operating time can be checked.
- It is equipped with a battery so it can be used without a separate external power.
- As for the cable connector of the checker, connect when the control power of OCR is off when inserting the OCR.
- As a product sold separately, place an order for HGNS OCC.
- HGNS OCC is a product with a calibration certificate issued by a specializing institute.

Ratings

Item	Detailed Specification
External Power (Adaptor)	Input : AC/DC 100 ~ 220 V, 50/60 Hz Output : DC 24 V, 2.5 A
Battery	Alkaline 9 V : 3 ea
Trip Time Measurement	0 ~ 999.999 sec
Test Output	0.3 Ict ~ 17 Ict
Output Precision	± 20 % (1 Ict ~ 17 Ict)
Size (mm)	193.40 (H) × 110.60 (W) × 44.60 (D)

Key Pad

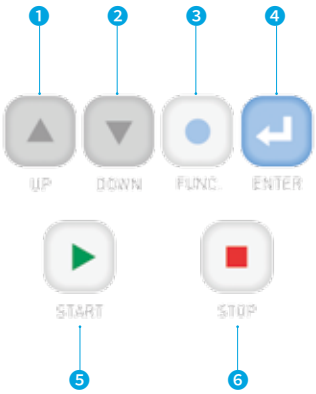

No.	Button	Application
1	UP	Move Menu and Increase Setting Value
2	DOWN	Move Menu and Decrease Setting Value
3	FUNC	Move to the Previous Menu and Return to the Setup Screen
4	ENTER	Save the Setting and Move the Number of Digits of Setting Current
5	START	Generate Waveform
6	STOP	Stop Waveform

Externals

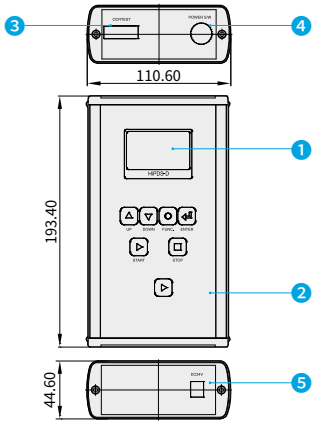

No.	Content	Function
1	LCD	Indicates Menu, Setting Current, Trip Time
2	Key Pad	Move Menu and Setting
3	Signal Output Terminal	OCR Connection Terminal
4	Power Switch	Power On/Off
5	Adapter Terminal	Control Terminal of Checker

Accessories

OCR Checker

Multi-functional OCR checker is test equipment that can inspect the OCR operation in unloaded status and the OCR status can be inspected through communication.

- Control Power : AC/DC 85 ~ 270 V (50/60 Hz)
- Specification
  - Dimension : 411 (L) × 321 (W) × 165 (H)
  - Weight : 8 kg
- Key Functions
  - Inspection of LTD, STD, INST, GFT operation and operating time
  - Inspection of PTA operation (Pre Trip Alarm)
  - Touch LCD

Rating	Specification
Control Power	AC/DC 85 ~ 270 V (50/60 Hz)
Output	Output Channel : 4 (R, S, T, N) Test Output : 0.4 ~ 17 Ict Precision : ± 3 %
Input	Communication : RS 485 Touch-Screen of HMI
Size	411×321×165 mm, 8 kg

NCT (Neutral CT)

- It is a separate mounting type of current transform installed in the N phase in case of protecting the earth fault by using 3-pole air circuit breaker with earth fault protection features in a 3 phase 4 line circuit. It clarifies the GFT operation caused by earth fault by detecting currents flowing in the N phase.
- The phase is important for inserting the relay so connect properly to the designated terminal.
- As a product sold separately, place the order using the following form name per rated current.
- Switch the OCR's switch from 3P to 4P after connecting the NCT power (k), 30 (ℓ) to the 3-pole circuit breaker.

Ordering Method

Name of Accessory	Order Name for Separate Sales (HGNS-)	Detailed Specification
Neutral CT	HGNS NCT_T	NCT T = 630 A/Inner Diameter 80
	HGNS NCT_H	NCT H = 800 A/Inner Diameter 80
	HGNS NCT_J	NCT J = 1,000 A/Inner Diameter 80
	HGNS NCT_K	NCT K = 1,250 A/Inner Diameter 80
	HGNS NCT_L	NCT L = 1,600 A/Inner Diameter 80
	HGNS NCT_M	NCT M = 2,000 A/Inner Diameter 135
	HGNS NCT_N	NCT N = 2,500 A/Inner Diameter 135
	HGNS NCT_P	NCT P = 3,200 A/Inner Diameter 135
	HGNS NCT_Q	NCT Q = 4,000 A/Inner Diameter 200
	HGNS NCT_S	NCT S = 5,000 A/Inner Diameter 200
	HGNS NCT_X	NCT X = 6,300 A/Inner Diameter 200

Externals

Unit : mm

630 ~ 1,600 A

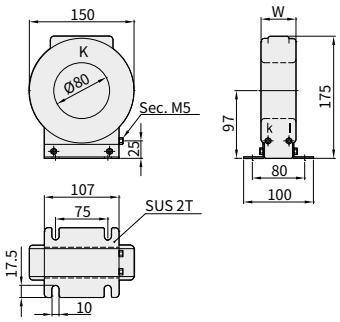

2,000 ~ 3,200 A

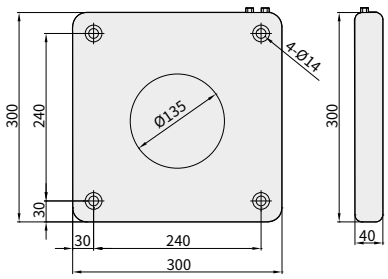

4,000 ~ 6,300 A

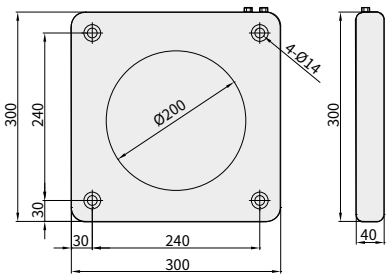

Accessories

CTD-Condenser Trip Device

- In case of using AC/DC power for trip control of the circuit breaker, it is a device that can electrically trip the circuit breaker once by using the power charged in the CTD when the supply of control voltage has been stopped due to black-out and others.
- It is a product sold separately.

Ordering Method

Name of Accessory	Order Name for Separate Sales (HGNS-)	Detailed Specification
CTD	HGNS CTD1	AC/DC 110 V
	HGNS CTD2	AC/DC 220 V

Ratings

Item	Details	
Rated Input Voltage	AC 110 V	AC 220 V
Normal Charging Voltage	DC 145 V	DC 290 V
Normal Current Capacity	DC 2 A	
Rated Frequency	50/60 Hz	
Delay Circuit Time	Within 1.5 sec	
Applicable Standard	IEC 60694/KSC 4611	

Connection Diagram

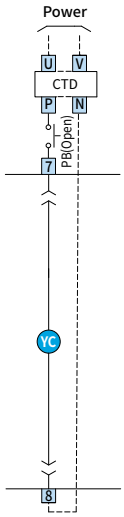

Operating Sequence of CTD External Operation Circuit

Unit : mm

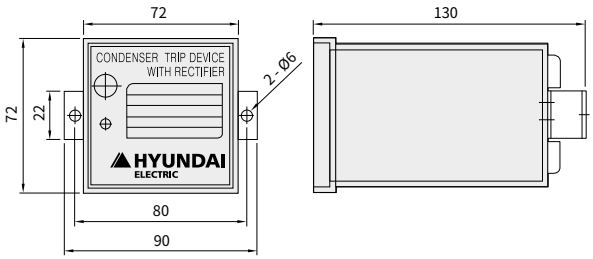

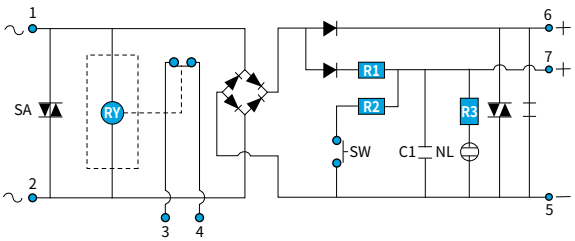

- AC Input Power NO. 1, 2
- CTD Trip Power NO. 7 (+), 5 (-)
- DC Normal Power NO. 6 (+), 5 (-)
- Delay Contact NO. 3, 4

Test Jumper

- It is a device that enables the main unit to be operated independently by separating the automatic connection type of main unit from the cradle.
- As a product sold separately, place an order for HGNS AJ when ordering.

Draw-In/Out Handle

- The draw-in/out handle for drawing the draw-in type of circuit breaker is provided basically.
- In case the standard handle is uncomfortable when drawing the circuit breaker in and out, Long Type Handle and Universal Joint Handle which are sold separately can be used.
- As a product sold separately, place an order of HGNS LHANDLE or HGNS UHANDLE.

Type

Long Type Handle

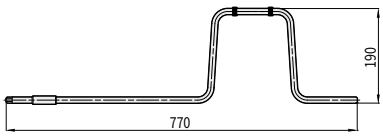

Universial Joint Handle

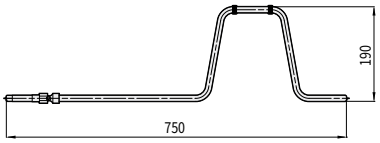

T-Type Handle

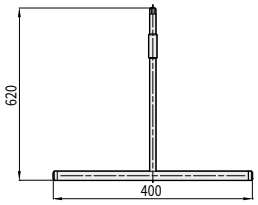

Ordering Method

Name of Accessory	Order Name Placed upon Outgoing	Order Name for Separate Sales (HGNS-)	Detailed Specification
Draw-In/Out Handle	-	HGNS HANDLE	Standard Handle (Provided as Standard)
		HGNS LHANDLE	Long Type of Draw-In/Out Handle (For ACB)
		HGNS UHANDLE	Universal Joint Type of Draw-In/Out Handle
		HGNS THANDLE	T-Type, Long Type Handle

Accessories

Door Flange

- It is an auxiliary device mounted on the cutting part of the panel door at the front protrusion mounting type of ACB.
- The door flange of our company is IP30.
- As for the cutting dimension of the panel, refer to the external drawing.
- As for the panel cutting dimension, it is equivalent for both the draw-out and fixed type and it is the same even if the dust cover is installed.
- As a product sold separately, place an order for HGNS AG.

Panel Door Cutting Dimension

Unit : mm

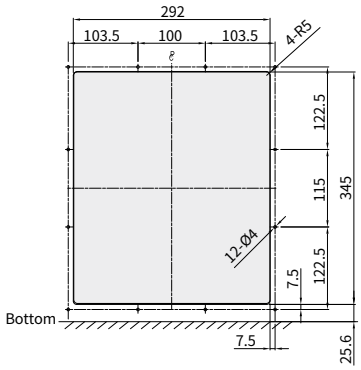

Dust Cover

- It is a device installed to protect against dust and moisture mounted on the cutting part of the panel door at the front protrusion mounting type of ACB.
- The dust cover of our company is IP52.
- The cover can be locked in the test and connected position.
- The cutting dimension of the panel must be referred to.
- As a product sold separately, place an order for HGNS DC.

Panel Door Cutting Dimension

Unit : mm

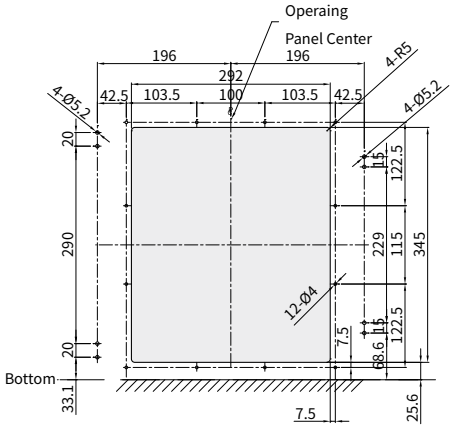

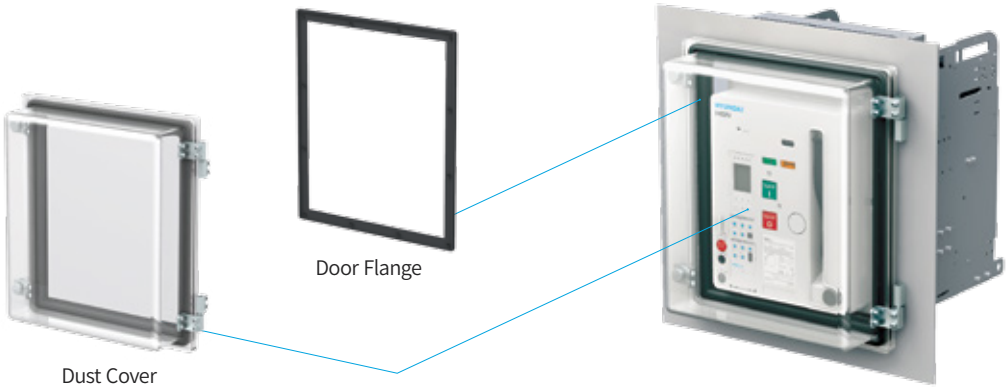

ATS & Controller

Features

- **Stable Transfer System**
  By applying Hyundai air circuit breaker equipped with the highest rated breaking capacity in Korea, it has outstanding protective features with regards to electric power system, making it optimal for places in which stable power supply is compulsory (Communication base station, computer center, hospital, plant equipment and other important facilities).
- **Unmanned Working System**
  Unmanned power transfer is possible by applying automatic power control device in the ACB equipped with mechanical interlock device.
- **Various Modes**
  Various modes is possible as it is equipped with 4 selection models for user convenience.
- **Multi Protection Device**
  The multi protection device installed in ACB has self-monitoring, simple set up and various protecting functions. Unlike the existing ATS, short circuit and overload protection are possible for stable use.
- **Compact Size, Lightweight**
  ACB is more compact and lightweight so it can easily be installed in the ATS switchgear and occupies less space.
- **ATS Configuration and Interlock**
  - ACB1 : "Normal" power (Power company side)
  - ACB2 : "Stand-by" power (Power generator side)
  - 3 : Mechanical interlock device unit
  - 4 : ATS unit

  Each ACB should meet the following specifications.
  - Geared charge type of mechanism (Control power of AC 220 V)
  - TC (Control power of AC 220 V)
  - CC (Control power of AC 220 V)
  - Trip device for overload or short protection (2a contact)

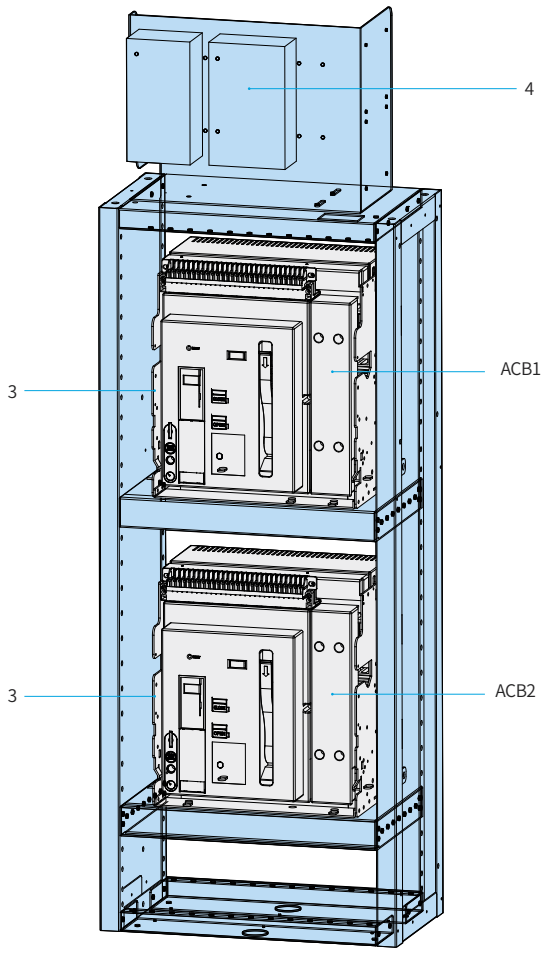

Transfer System's Interlock Conditions

ACB1	ACB2
Open	Open
Close	Open
Open	Close

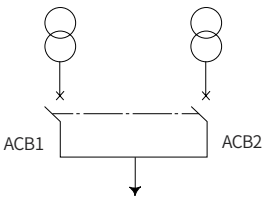

※ As a product sold separately, place an order for HGNS ATS when placing an order. However, M1 has to be ordered separately and B0, BA must be added when placing an order for the product.

Accessories

ATS & Controller

Characteristics per Mode

There are 4 selection modes.

- **Stop/Manu Mode**
  This mode offers On/Off functions using ACB Manual from the power company side and generator side.
- **Auto Mode**
  This mode is for automatically controlling the ACB depending on the sequence of system operation flow chart in the controller.
- **N Mode (Forced Operation of Power Company Power)**
  This mode turns off the ACB at the generator side and turns on the ACB at the power company side by force.
- **R Mode (Forced Operation of Generator Power)**
  This mode turns off the ACB at the power company side and turns on the ACB at the generator side by force.

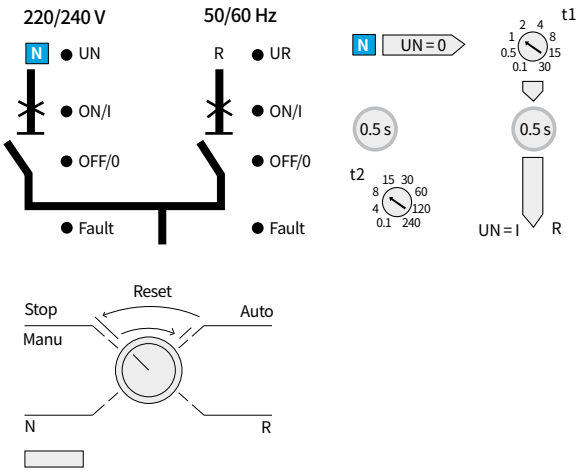

Time Delay Adjustment	Indication of the Controller's Status
t1 : 0.1 ~ 30 sec	On, Off, Fault Indication
t2 : 0.1 ~ 240 sec	(Power Company Side, Generator Side)

Operation Characteristics

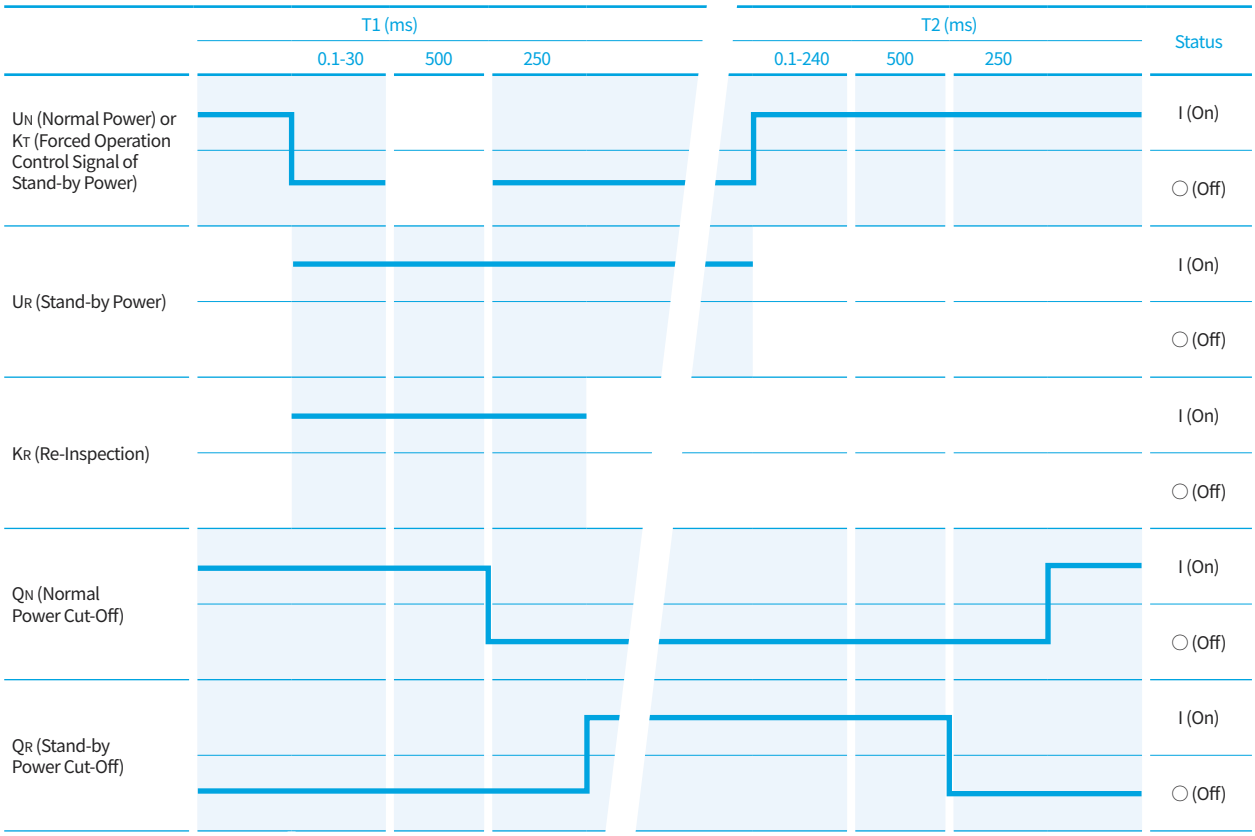

System Operation

Stop Mode

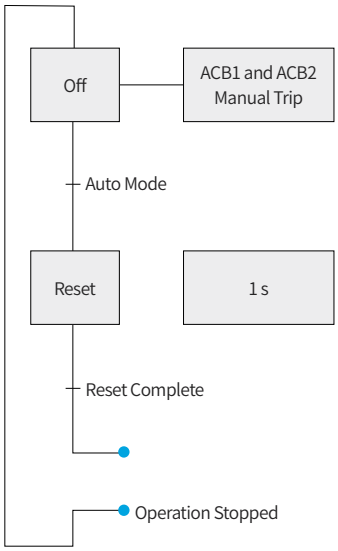

Auto Mode

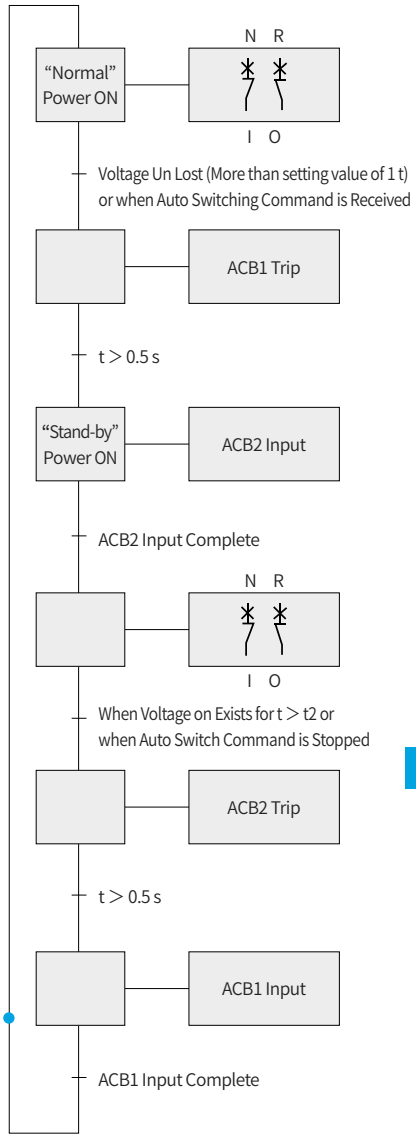

N Mode ("Normal Mode" Forced ON)

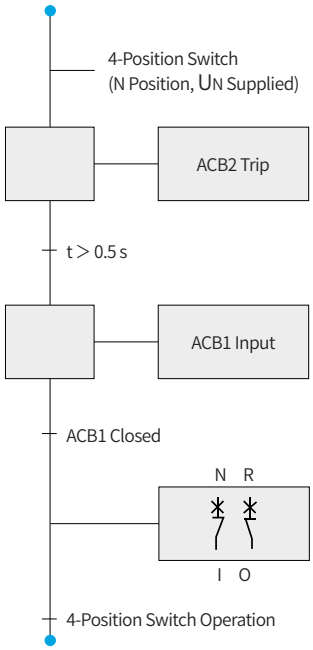

R Mode ("Stand-by" Power Forced ON)

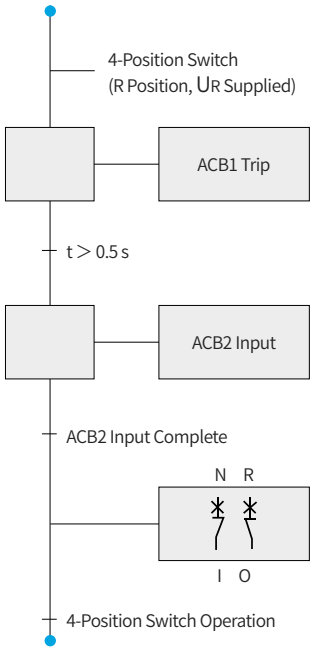

- ACB1 : HGN (S) ACB1 "Normal" Power (Power Company Side)
- ACB2 : HGN (S) ACB2 "Stand-by" Power (Generator Side)
- U_N : "Normal" Power Voltage
- U_R : "Stand-by" Power Voltage

Accessories

ATS & Controller

Circuit Diagram of the System [HGS/HGN Type]

Auto Switch System's Auxiliary Device Circuit Diagram

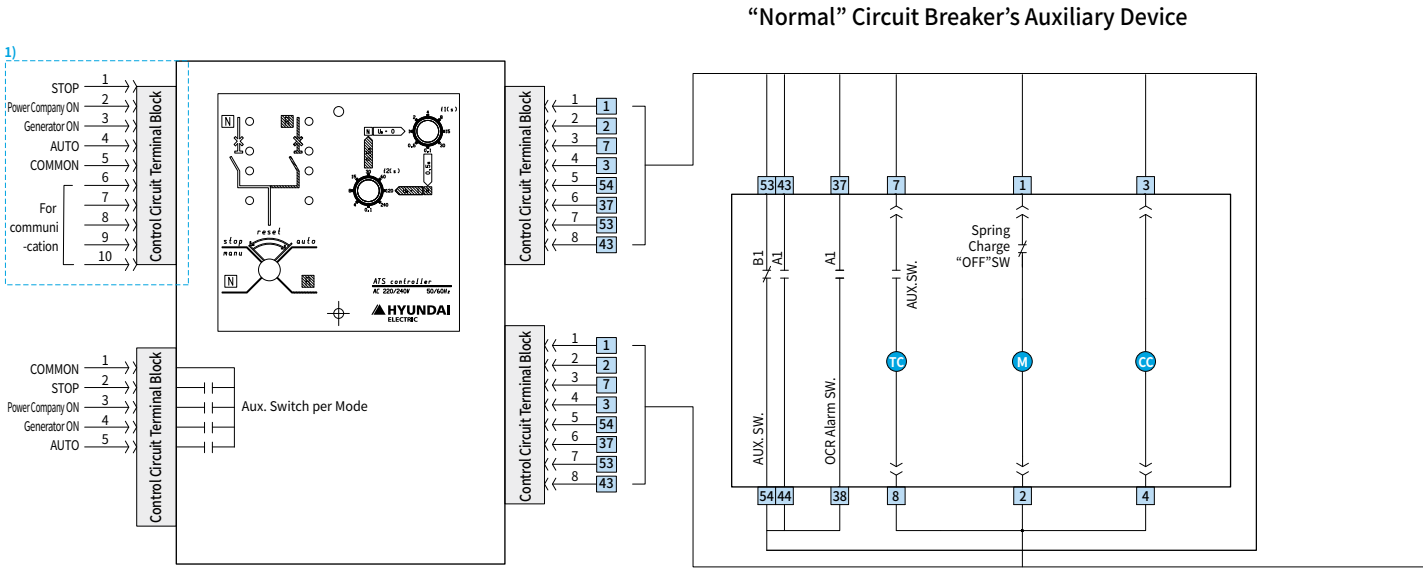

※ 1) The standard model is a SW mounting type on controller. (Control terminal type is not a standard model)

Auto Power Switch System's Auxiliary Device Circuit Diagram applied with 2 ACBs

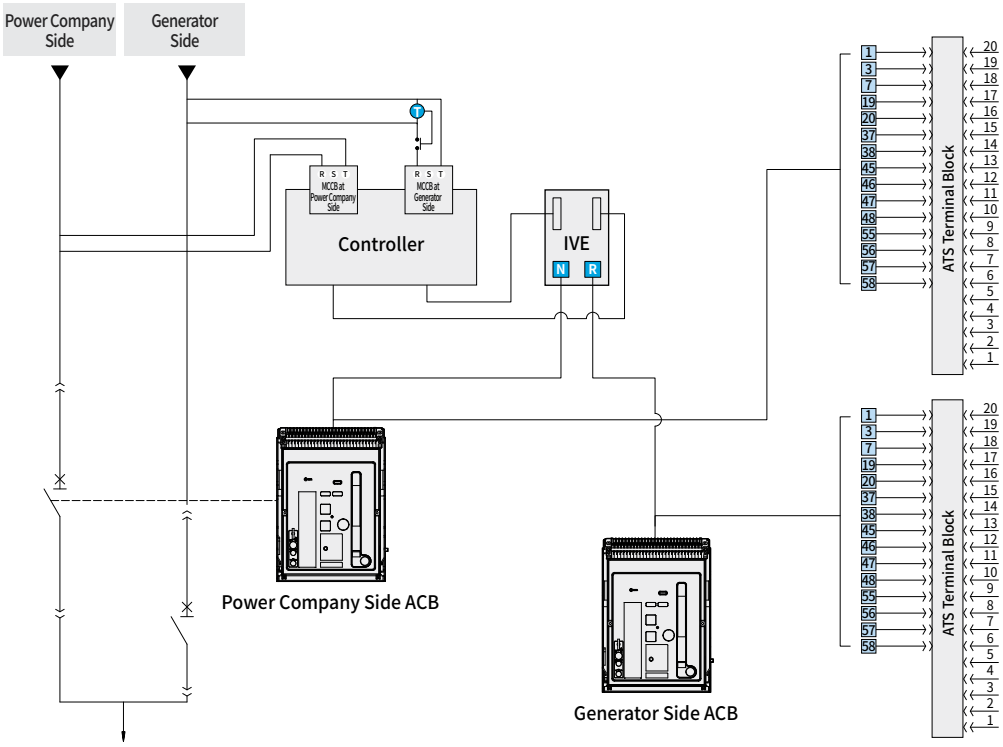

"Stand-by" Circuit Breaker's Auxiliary Device

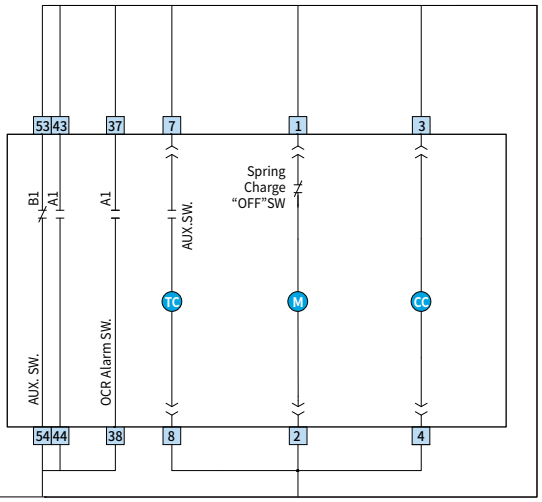

- 37 38 OCR DO
- 43 44 Auxiliary a Switch Terminal
- 53 54 Auxiliary b Switch Terminal
- TC Voltage Trip
- 7 8 Voltage Trip Power Terminal
- 1 2 Geared Charge Power Terminal
- 3 4 Power Terminal for Close
- M Charging Motor
- CC Latch Release (Close)

ATS Panel Remote Circuit Diagram

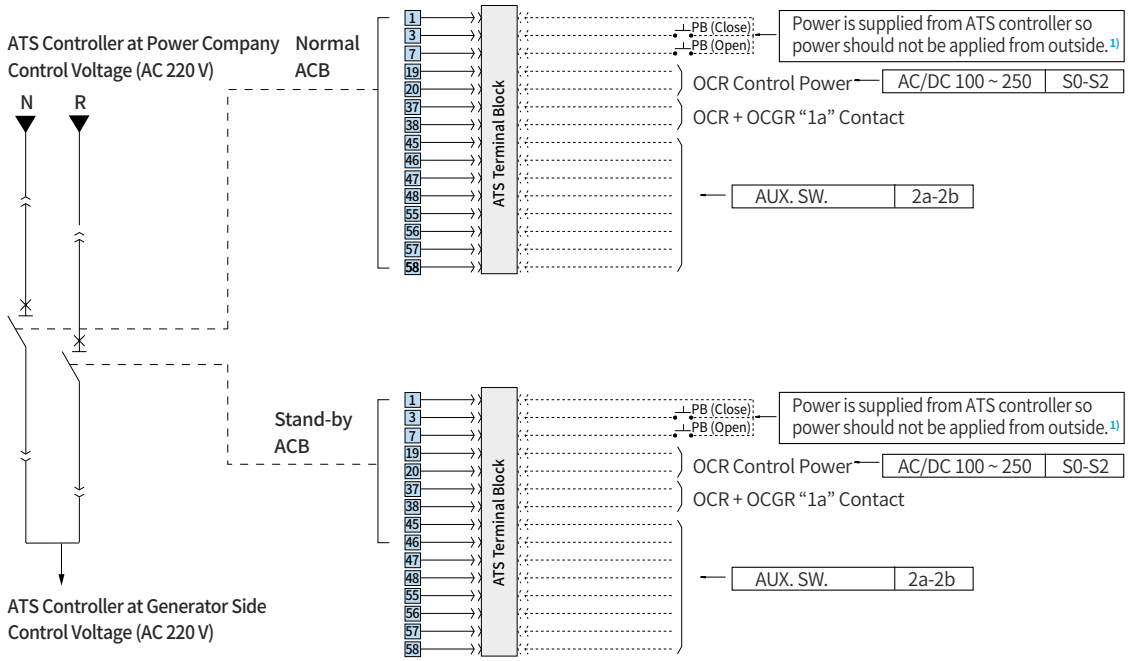

※ 1) Upon remote operation, as for the Open/Close power, the power is supplied from the ATS control device so do not input a separate control power supply. (Terminal number "1", "7", "16")

Accessories

ATS & Controller

Dimensions [ATS HGN A Frame]

HGN06 ~ 16 A

Unit : mm

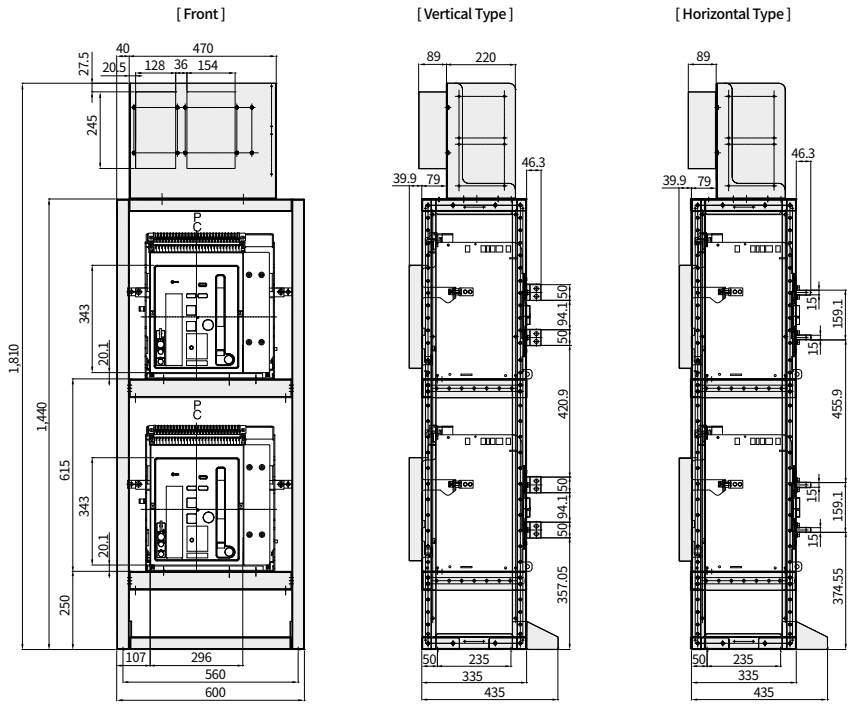

HGN20 A

Unit : mm

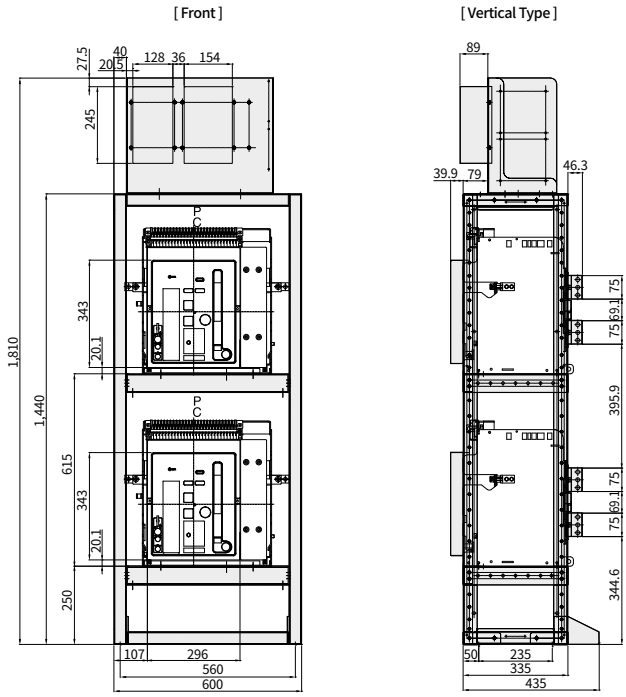

※ The drawing dimension of this page may be subject to change without prior notice.

Dimensions [ATS HGN B Frame]

HGN20 ~ 25 B

Unit : mm

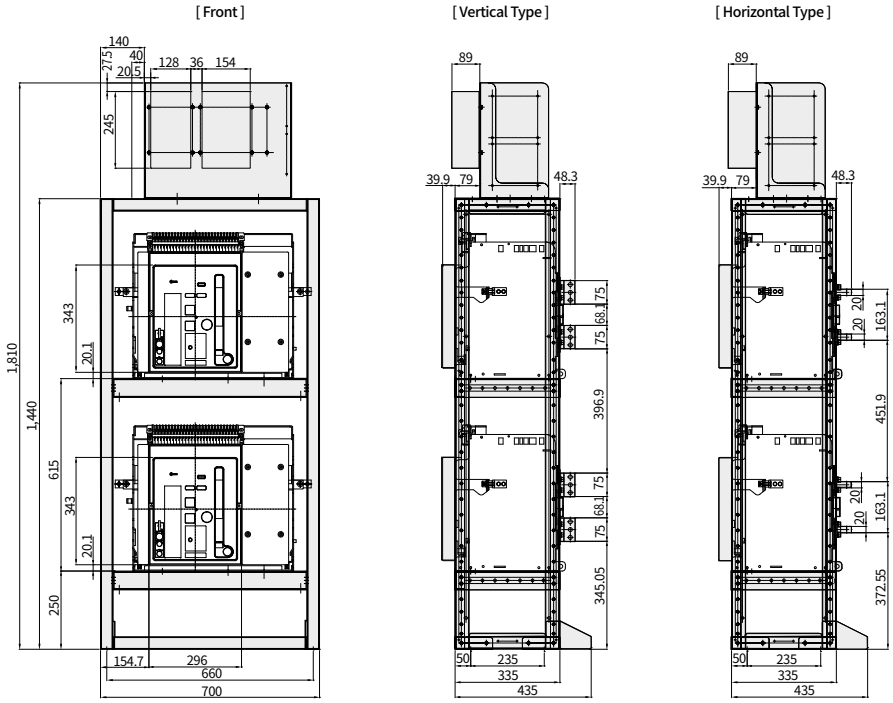

HGN32 B

Unit : mm

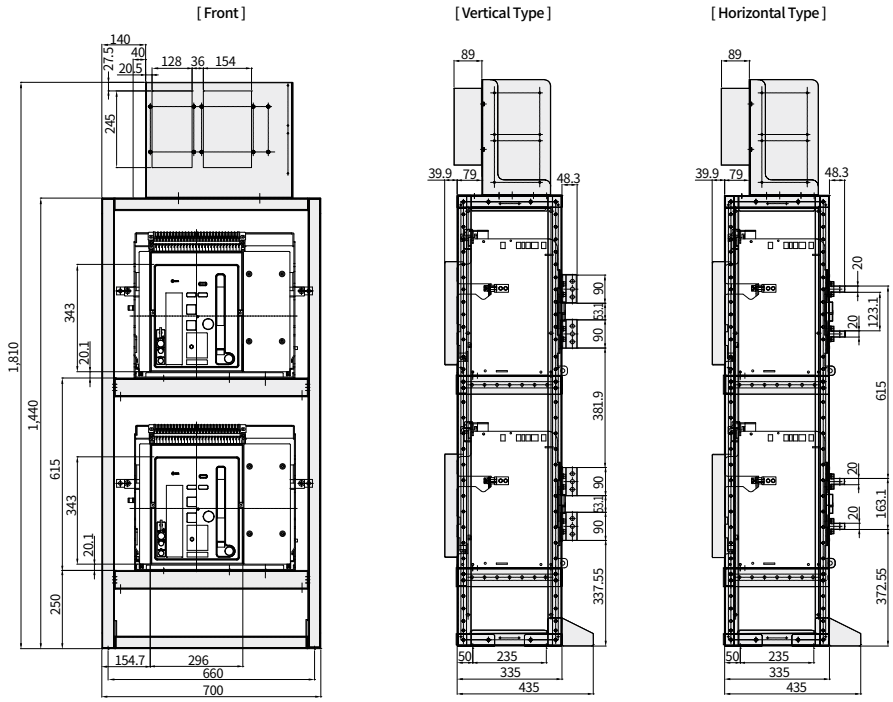

※ The drawing dimension of this page may be subject to change without prior notice.

Accessories

ATS & Controller

Dimensions [ATS HGN B Frame]

HGN40 B

Unit : mm

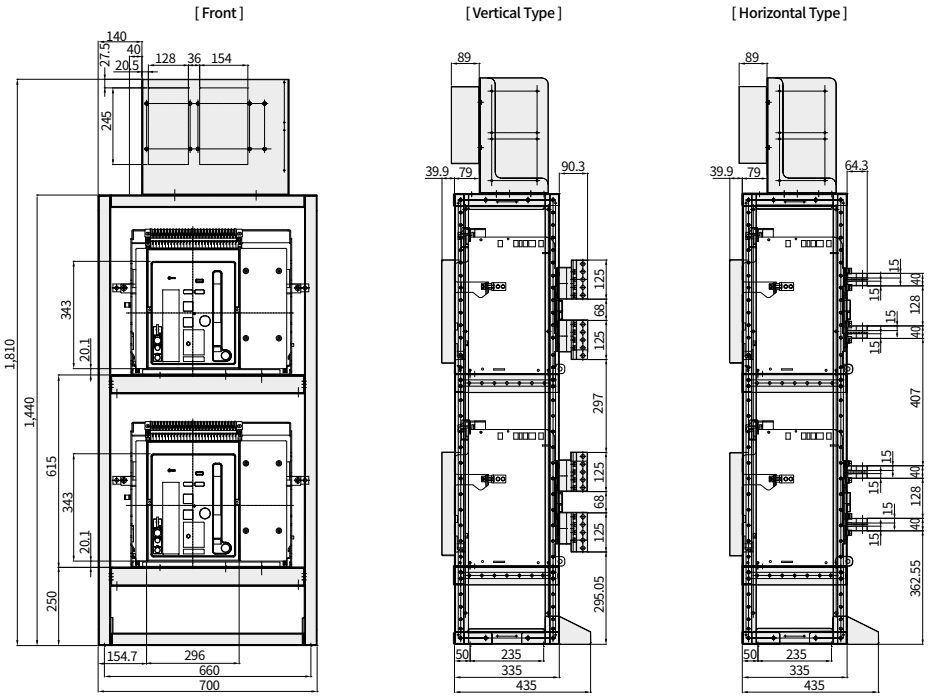

※ The drawing dimension of this page may be subject to change without prior notice.

Dimensions [ATS HGN C Frame]

HGN40 ~ 50 C, 3P

Unit : mm

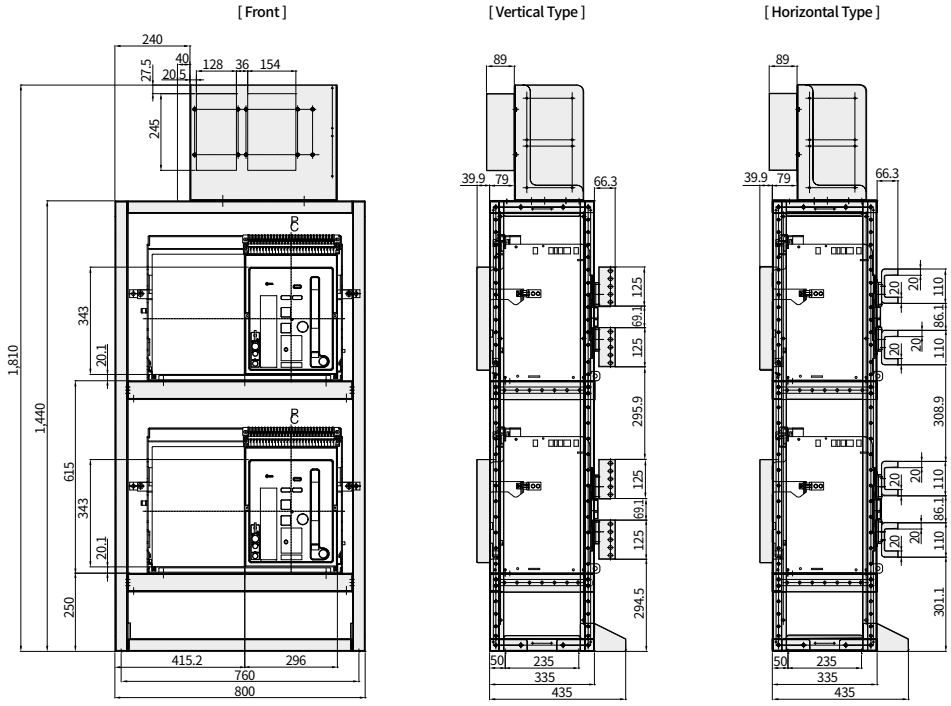

HGN40 ~ 50 C, 4P

Unit : mm

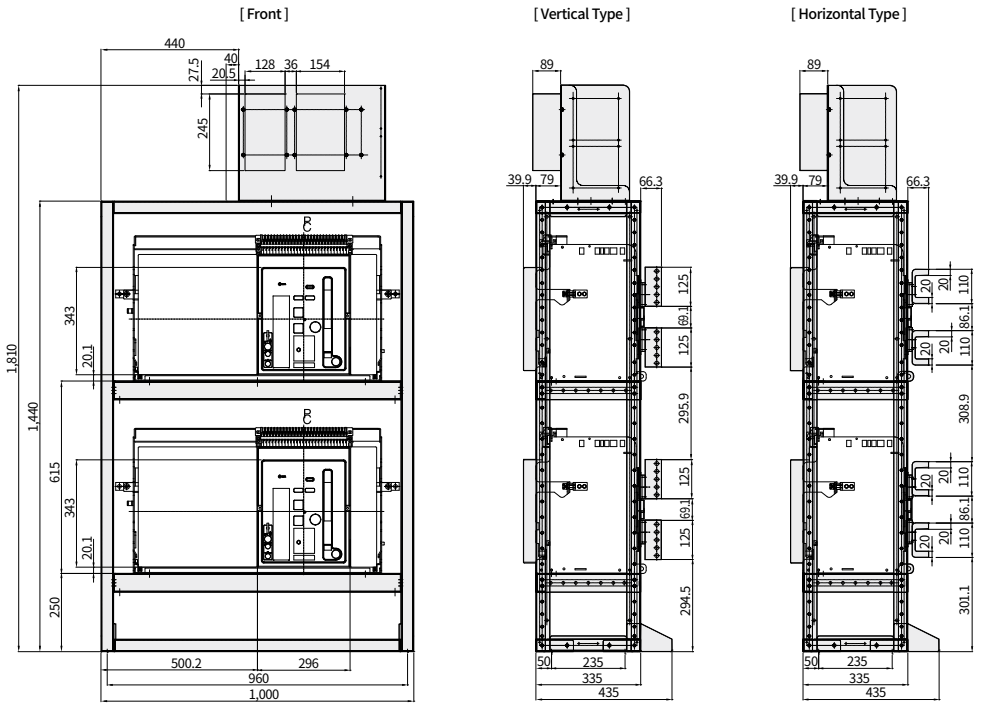

※ The drawing dimension of this page may be subject to change without prior notice.

Accessories

ATS & Controller

Dimensions [ATS HGN D Frame]

HGN40 D, 3P

Unit : mm

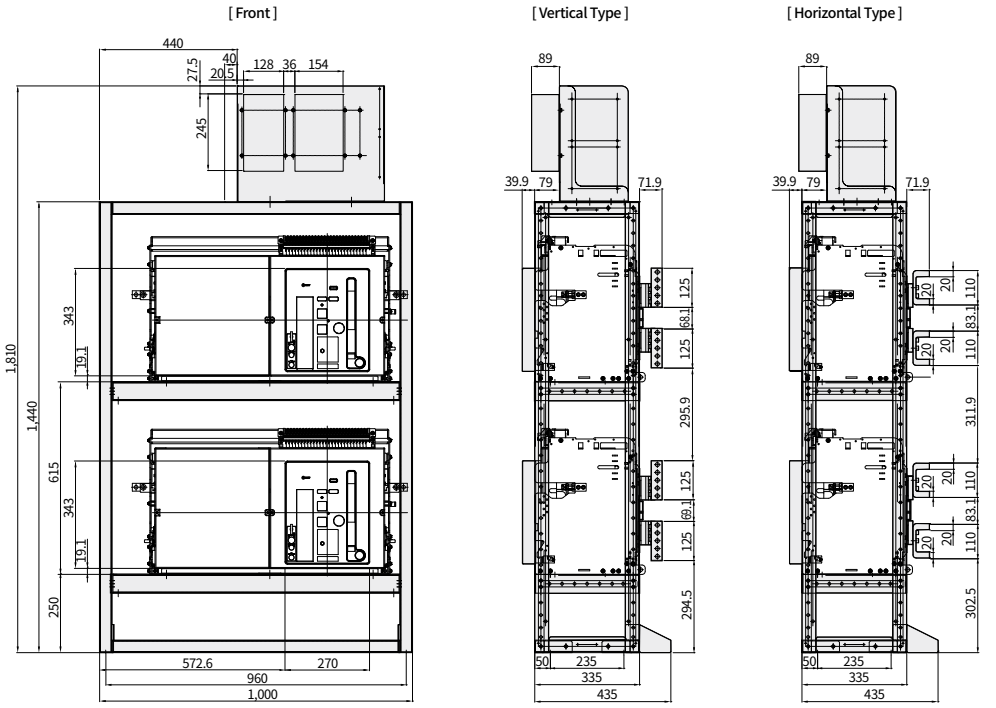

HGN40 D, 4P

Unit : mm

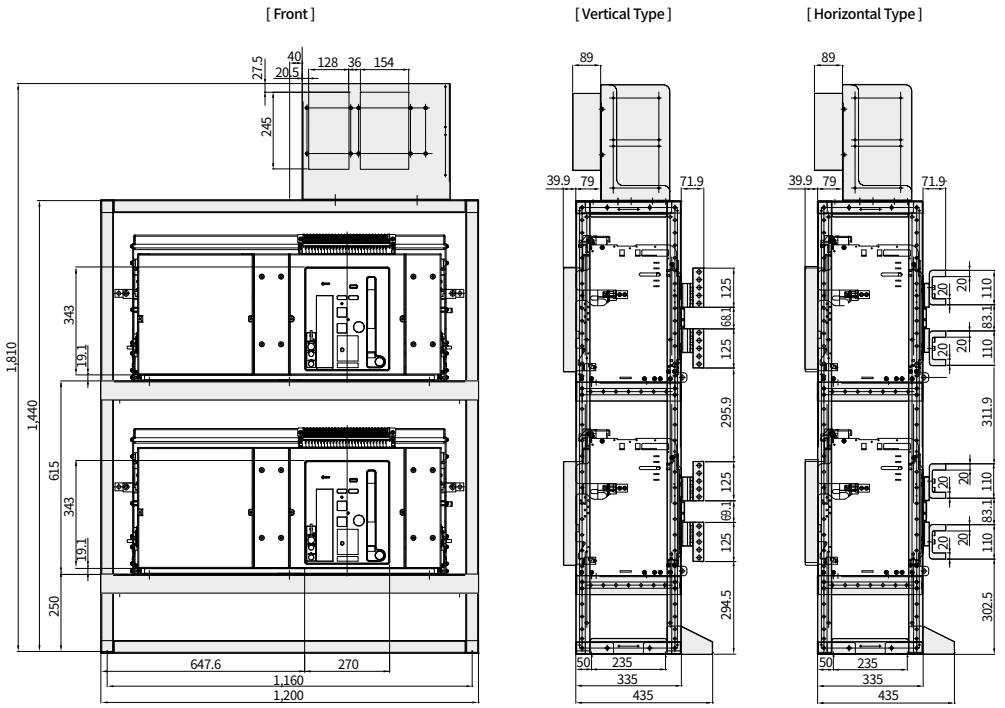

※ The drawing dimension of this page may be subject to change without prior notice.

HGN50 ~ 63 D, 3P

Unit : mm

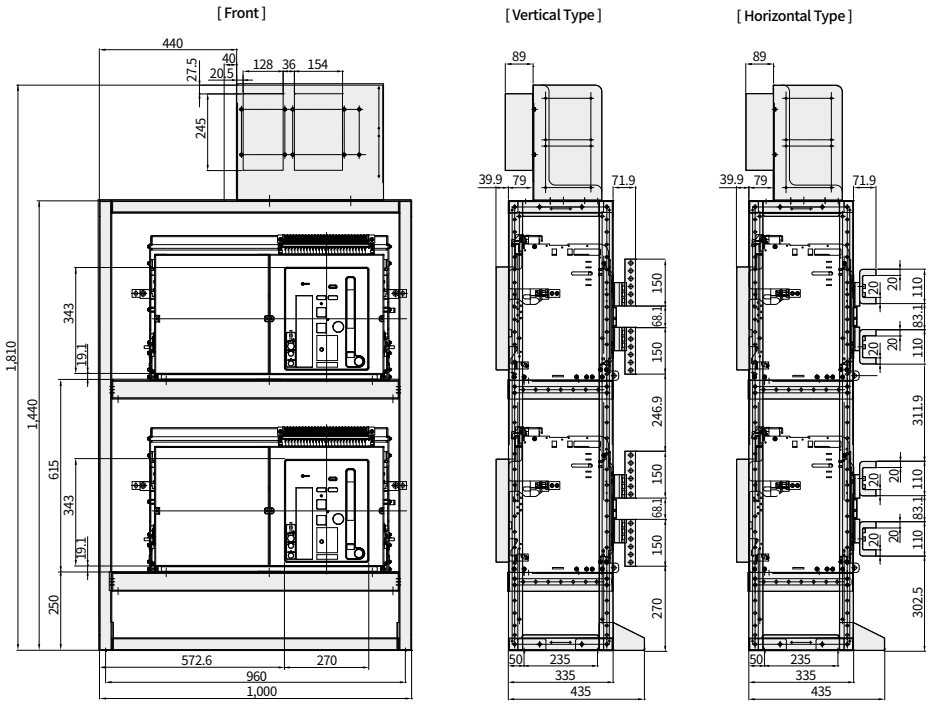

HGN50 ~ 63 D, 4P

Unit : mm

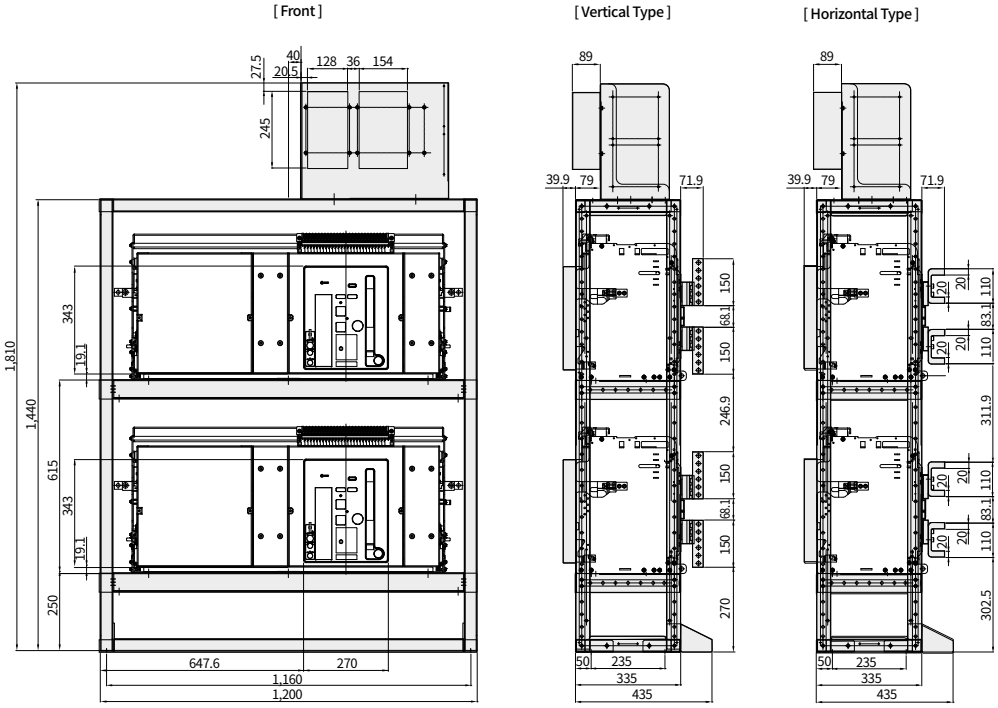

※ The drawing dimension of this page may be subject to change without prior notice.

Accessories

Order Code

Name of Accessory	Order Form		Detailed Specification	Release Form	Page
	Mounted	Sold Separately			
Terminal Bus Bar [1] (Draw-Out Type)	-	HGNS HVA3	Up-Down Horizontal/Up-Down Vertical (A Frame, 06 ~ 16A 3P)	Sold Separately	-
	-	HGNS HVA4	Up-Down Horizontal/Up-Down Vertical (A Frame, 06 ~ 16A 4P)		
	-	HGNS HVB3	Up-Down Horizontal/Up-Down Vertical (B Frame, 06 ~ 32B 3P)		
	-	HGNS HVB4	Up-Down Horizontal/Up-Down Vertical (B Frame, 06 ~ 32B 4P)		
	-	HGNS FRA3	Up-Down Front 6 ea (A Frame, 06 ~ 16A 3P)		
	-	HGNS FRA4	Up-Down Front 8 ea (A Frame, 06 ~ 16A 4P)		
	-	HGNS FRB3	Up-Down Front 6 ea (B Frame, 06 ~ 32B 3P)		
	-	HGNS FRB4	Up-Down Front 8 ea (B Frame, 06 ~ 32B 4P)		
	-	HGNS FHVA3	Up-Down Front 3 ea + Horizontal/Vertical 3 ea 06 ~ 16A 3P		
	-	HGNS FHVA4	Up-Down Front 4 ea + Horizontal/Vertical 4 ea 06 ~ 16A 4P		
	-	HGNS FHVB3	Up-Down Front 3 ea + Horizontal/Vertical 3 ea 06 ~ 32B 3P		
	-	HGNS FHVB4	Up-Down Front 4 ea + Horizontal/Vertical 4 ea 06 ~ 32B 4P		
Terminal Bus Bar [2] (Fixed Type)	-	HGNS FRA3F	Up-Down Front 6 ea (A Frame, 06 ~ 16A 3P) + Additional Spacer 6	Sold Separately	-
	-	HGNS FRA4F	Up-Down Front 8 ea (A Frame, 06 ~ 16A 4P) + Additional Spacer 8		
	-	HGNS FRB3F	Up-Down Front 6 ea (B Frame, 06 ~ 32B 3P) + Additional Spacer 6		
	-	HGNS FRB4F	Up-Down Front 8 ea (B Frame, 06 ~ 32B 4P) + Additional Spacer 8		
	-	HGNS FHVA3F	Up-Down Front 3 ea + Horizontal/Vertical 3 ea 06 ~ 16A 3P + Additional Spacer 3		
	-	HGNS FHVA4F	Up-Down Front 4 ea + Horizontal/Vertical 4 ea 06 ~ 16A 4P + Additional Spacer 4		
	-	HGNS FHVB3F	Up-Down Front 3 ea + Horizontal/Vertical 3 ea 06 ~ 32B 3P + Additional Spacer 3		
	-	HGNS FHVB4F	Up-Down Front 4 ea + Horizontal/Vertical 4 ea 06 ~ 32B 4P + Additional Spacer 4		
Auxiliary Switch [3]	MC	HGNS MOC	External Auxiliary Contact 10a10b (Mechanical Opearting Cell Switch)	Mounted upon Release and Sold Separately	-
Automatic Connection Control Terminal Protection Cover	BC	HGNS BC	Automatic Connection Control Terminal Cover (Cannot be Mounted on Fixed Type, Manual Connection Type)	Mounted upon Release and Sold Separately	-
Manual Connector	J	HGNS MCJ	Manual Control Plug	Sold Separately	-
Manual Connector Lead Wire	J	HGNS MWIRE	Manual Connector Lead Wire	Mounted upon Release and Sold Separately	-
Condenser Trip Device	-	HGNS CTD1	AC/DC 110 V	Sold Separately	-
	-	HGNS CTD2	AC/DC 220 V		
UVT Time Delay Module [4]	-	HGNS UT1	AC/DC 110 V & DC 125 V	Sold Separately	-
	-	HGNS UT2	AC/DC 220 V		
	-	HGNS UT3	AC 380 V		
	-	HGNS UT4	AC 440 V		
	-	HGNS UT9	AC/DC 110 V & DC 125 V		
UVT Time Delay Module + UVT Coil	V1	HGNS V1	AC/DC 110 V	Mounted upon Release and Sold Separately	-
	V2	HGNS V2	AC/DC 220 V		
	V3	HGNS V3	AC 380 V		
	V4	HGNS V4	AC 440 V		
	V9	HGNS V9	DC 125 V		
OCR Acce	-	HGNS OC	OCR Portable Checker	Sold Separately	-
	-	HGNS VM	Voltage Module		

※ 1) Only the terminal bus bar (Draw-out type) A frame 630 ~ 1,600A/B frame 2,000 ~ 3,200 A-draw-out type can be ordered.
2) Only the terminal bus bar (Fixed type) A frame 630 ~ 1,600A/B frame 2,000 ~ 3,200 A-fixed type can be ordered.
3) Contact us when placing an order for set order required for installation.
4) UVT time delay type of controller is mounted outside the main unit or the cradle.

Name of Accessory	Order Form		Detailed Specification	Release Form	Page
	Mounted	Sold Separately			
Key Lock	AB	HGNS AB	Key Lock	Mounted upon Release and Sold Separately	-
Safety Shutter	AE	HGNS AEA3	06A3 ~ 20A3	Mounted upon Release and Sold Separately	-
		HGNS AEA4	06A4 ~ 20A4		
		HGNS AEB3	20B3 ~ 40B3		
		HGNS AEB4	20B4 ~ 40B4		
		HGNS AEC3	32C3 ~ 50C3		
		HGNS AEC4	32C4 ~ 50C4		
		HGNS AED3	40D3 ~ 63D3		
		HGNS AED4	40D4 ~ 63D4		
Fixing Block	AF	HGNS AF	For Main Unit + Cradle	Mounted upon Release and Sold Separately	-
		HGNS AFB	For Main Unit + Cradle	Sold Separately	-
		HGNS AFC	For Cradle		
Position Switch [5]	AQ	HGNS AQ	Test 1C, Connected 1C	Mounted upon Release and Sold Separately	-
	AR	HGNS AR	Connected 2C		
	AS	HGNS AS	Test 2C		
	AT	HGNS AT	Isolated 1C, Inserted 1C		
	AU	HGNS AU	Inserted 2C		
	AV	HGNS AV	Isolated 2C		
	P4	HGNS P4	Test 2C, Connected 2C		
	PS	HGNS PS	Isolated 1C, Test 1C, Connected 2C		
	PT	HGNS PT	Test 4C		
	PQ	HGNS PQ	Inserted 1C, Isolated 1C, Test 1C, Connected 1C		
	P8	HGNS P8	Inserted 2C, Isolated 2C, Test 2C, Connected 2C		
	PR	HGNS PR	Inserted 1C, Isolated 1C, Test 3C, Connected 3C		
Miss Insertion Preventor	AW	HGNS AW	Add Order Form in the Main Unit + Cradle, Main Unit/Cradle Respectively	Mounted upon Release and Sold Separately	-
Arc Shield	AX	HGNS AXA3	06A3 ~ 20A3	Mounted upon Release and Sold Separately	-
		HGNS AXA4	06A4 ~ 20A4		
		HGNS AXB3	20B3 ~ 40B3		
		HGNS AXB4	20B4 ~ 40B4		
		HGNS AXC3	32C3 ~ 50C3		
		HGNS AXC4	32C4 ~ 50C4		
		HGNS AXD3	40D3 ~ 63D3		
		HGNS AXD4	40D4 ~ 63D4		
Mech Interlock [6]	-	HGNS DWB1	Drawout (Fixed)/Wire Type 2 Way MI	Sold Separately	-
	-	HGNS DWB2	Drawout (Fixed)/Wire Type 3 Way MI		
	-	HGNS FWB1	Fixed/Wire Type 2 Way MI		
	-	HGNS FWB2	Fixed/Wire Type 3 Way MI		
	-	HGNS DWB1A	A Frame, Draw-Out Type, Wire Type 2 Way MI + Interlock Parts (B0)		
	-	HGNS DWB2A	A Frame, Draw-Out Type, Wire Type 3 Way MI + Interlock Parts (B0)		
	-	HGNS DWB1B	B Frame, Draw-Out Type, Wire Type 2 Way MI + Interlock Parts (B0)		
	-	HGNS DWB2B	B Frame, Draw-Out Type, Wire Type 3 Way MI + Interlock Parts (B0)		

※ 5) Position switch cannot be used together and can only be mounted at the right side of the cradle.
6) Mechanical interlock is a wire type. The MI unit is mounted outside the main unit or on the cradle and the interlock part is mounted inside the main unit.

Accessories

Order Code

Name of Accessory	Order Form		Detailed Specification	Release Form	Page
	Mounted	Sold Separately			
Mech Interlock [6]	-	HGNS DWB1C3	C Frame 3P, Draw-Out Type, Wire Type 2 Way MI + Interlock Parts (B0)	Sold Separately	-
	-	HGNS DWB1C4	C Frame 4P, Draw-Out Type, Wire Type 2 Way MI + Interlock Parts (B0)		
	-	HGNS DWB2C3	C Frame 3P, Draw-Out Type, Wire Type 3 Way MI + Interlock Parts (B0)		
	-	HGNS DWB2C4	C Frame 4P, Draw-Out Type, Wire Type 3 Way MI + Interlock Parts (B0)		
	-	HGNS FWB1A	A Frame, Fixed Type, Wire Type 2 Way MI + Interlock Parts (B0)		
	-	HGNS FWB2A	A Frame, Fixed Type, Wire Type 3 Way MI + Interlock Parts (B0)		
	-	HGNS FWB1B	B Frame, Fixed Type, Wire Type 2 Way MI + Interlock Parts (B0)		
	-	HGNS FWB2B	B Frame, Fixed Type, Wire Type 3 Way MI + Interlock Parts (B0)		
	-	HGNS FWB1C3	C Frame, 3P, Fixed Type, Wire Type 2 Way MI + Interlock Parts (B0)		
	-	HGNS FWB1C4	C Frame, 4P, Fixed Type, Wire Type 2 Way MI + Interlock Parts (B0)		
	-	HGNS FWB2C3	C Frame, 3P, Fixed Type, Wire Type 3 Way MI + Interlock Parts (B0)		
	-	HGNS FWB2C4	C Frame, 4P, Fixed Type, Wire Type 3 Way MI + Interlock Parts (B0)		
	BO	HGNS B0DA	A Frame, Interlock Parts (B0)	Mounted upon Release and Sold Separately	-
		HGNS B0DB	B Frame, Interlock Parts (B0)		
		HGNS B0DC3	C Frame, 3P Interlock Parts (B0)		
		HGNS B0DC4	C Frame, 4P Interlock Parts (B0)		
		HGNS B0FA	A Frame, Interlock Parts (B0) + Fixed Bracket		
		HGNS B0FB	B Frame, Interlock Parts (B0) + Fixed Bracket		
		HGNS B0FC3	C Frame, 3P Interlock Parts (B0) + Fixed Bracket		
		HGNS B0FC4	C Frame, 4P Interlock Parts (B0) + Fixed Bracket		
ATS Controller	B6B7	HGNS ATS	ATS Controller UNIT (ATS Controller + 2 Way M/I + Wiring Assemble) for Draw Out	Mounted upon Release and Sold Separately	-
RCTU	-	HGNS RCU	RCTU	Sold Separately	-
	-	HGNS RCTU	RCTU + Temperature Monitoring Device Module		
	-	HGNS RCTUN	RCTU + Temperature Monitoring Device Module + Temperature Sensor		
	-	HGNS TSN	Temperature Sensor		
Neutral CT	-	HGNS NCT_T	T = 630 A/Inner Diameter 80	Sold Separately	-
	-	HGNS NCT_H	NCT H = 800 A/Inner Diameter 80		
	-	HGNS NCT_J	NCT J = 1,000 A/Inner Diameter 80		
	-	HGNS NCT_K	NCT K = 1,250 A/Inner Diameter 80		
	-	HGNS NCT_L	NCT L = 1,600 A/Inner Diameter 80		
	-	HGNS NCT_M	NCT M = 2,000 A/Inner Diameter 135		
	-	HGNS NCT_N	NCT N = 2,500 A/Inner Diameter 135		
	-	HGNS NCT_P	NCT P = 3,200 A/Inner Diameter 135		
	-	HGNS NCT_Q	NCT Q = 4,000 A/Inner Diameter 200		
	-	HGNS NCT_S	NCT S = 5,000 A/Inner Diameter 200		
	-	HGNS NCT_X	NCT X = 6,300 A/Inner Diameter 200		
Door Flange	AG	HGNS AG	IP30	Mounted upon Release and Sold Separately	-
Dust Cover	-	HGNS DC	IP54	Sold Separately	-
Test Jumper	-	HGNS AJ	For Automatic Connection Type of Test	Sold Separately	-
Short "B" Contact	AK	HGNS AK	Short Circuit "B" Contact	Mounted upon Release and Sold Separately	-
Lifting LUG	-	HGNS AL	2 ea = 1 set, C Frame 5,000 A is Provided as Standard	Sold Separately	-

※6) Mechanical interlock is a wire type. The MI unit is mounted outside the main unit or on the cradle and the interlock part is mounted inside the main unit.

Name of Accessory	Order Form		Detailed Specification	Release Form	Page
	Mounted	Sold Separately			
On/Off Button Lock	AM	HGNS AM	On/Off Button Cover Lock	Sold Separately	-
Door Lock (On/Off)	-	HGNS DL_CO	Pannel Door Lock for On/Off (In Case of On) In Course of Development	Sold Separately	-
Door Lock (Position)	-	HGNS DL_PO	Pannel Door Lock for Position (In Case of Test or Connected) > In Course of Development	Sold Separately	-
Insulation Barrier	-	HGNS PBAR	Insulation Barrier	Sold Separately	-
Draw In-Out Handle	-	HGNS LHANDLE	Long Head Type Draw In-Out Handle	Sold Separately	-
	-	HGNS UHANDLE	Universal Join Head Draw In-Out Handle		
	-	HGNS THANDLE	T Grip Long Type Draw In-Out Handle		
	-	HGNS HANDLE	Standard Draw In-Out Handle		

Dimensions

HGS/HGN Fixed Type 630 ~ 2,000 A (HGS06 ~ 16/HGN06 ~ 20 A Frame)

Unit : mm

Front

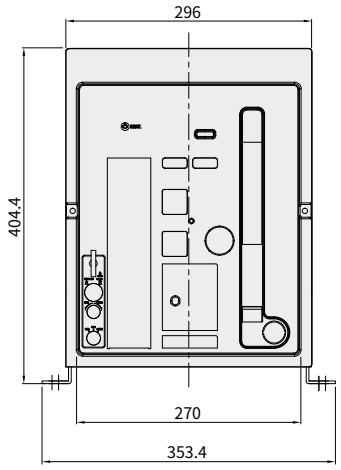

3P

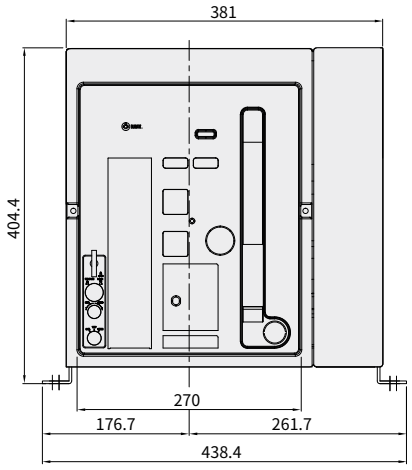

4P

Vertical Type

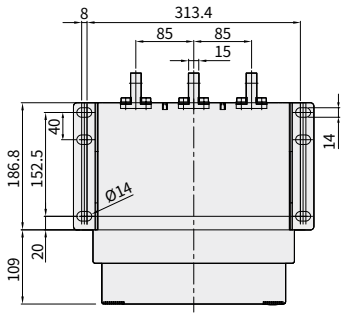

[HGS/HGN 630 ~ 1,600 A]

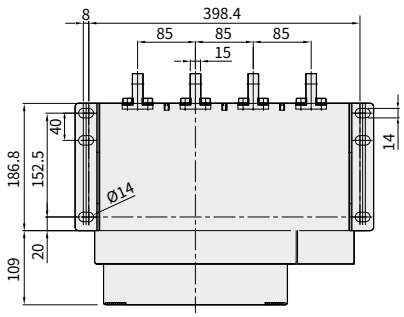

[HGN 2,000 A]

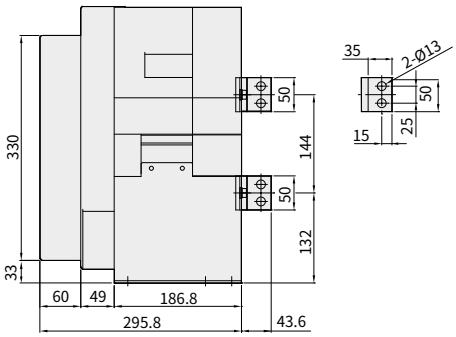

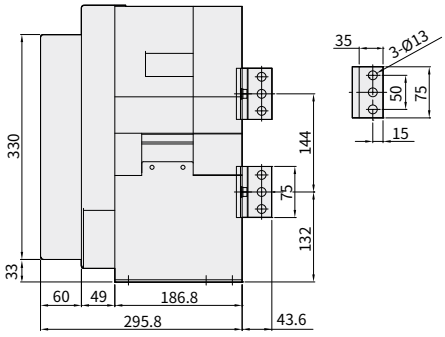

※ The drawing dimension of this page may be subject to change without prior notice.
As for the HGN fixed type A type 2,000 A, only the vertical terminal can be applicable.

Unit : mm

Horizontal Type (630 ~ 1,600 A)

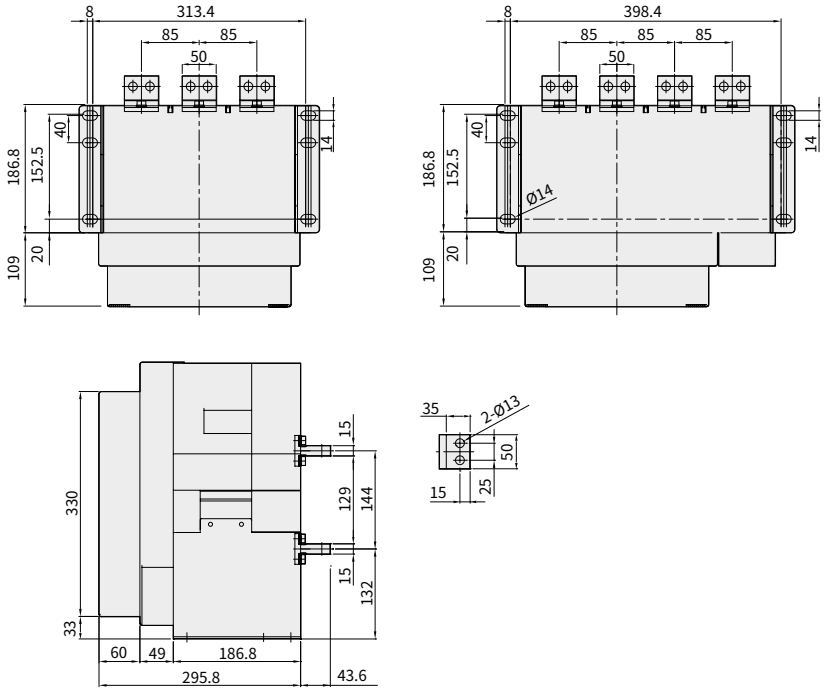

Front Type (630 ~ 1,600 A)

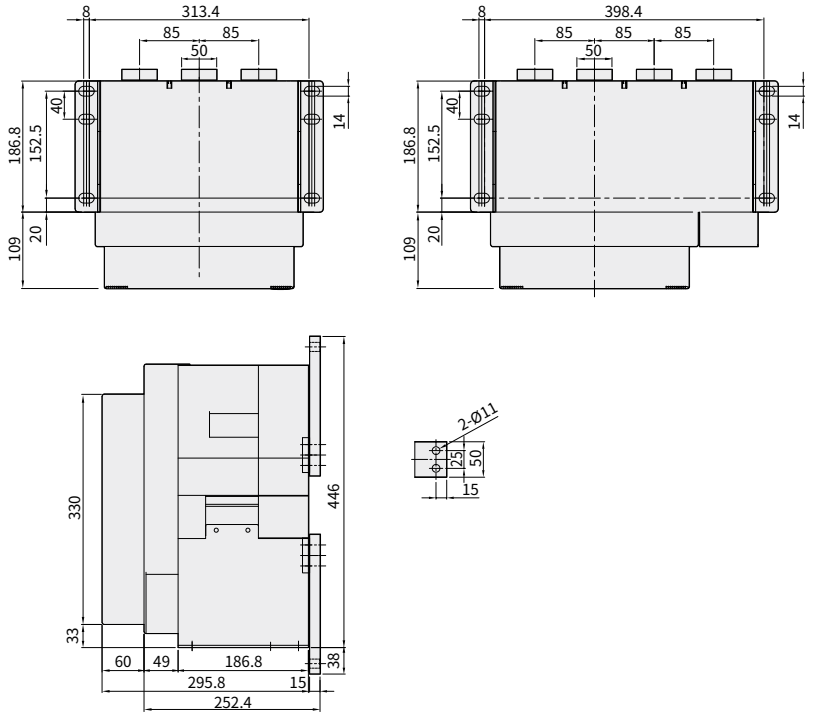

※ The drawing dimension of this page may be subject to change without prior notice.

Dimensions

HGS/HGN Draw-Out Type 630 ~ 2,000 A (HGS06 ~ 16/HGN06 ~ 20 A Frame)

Unit : mm

Front

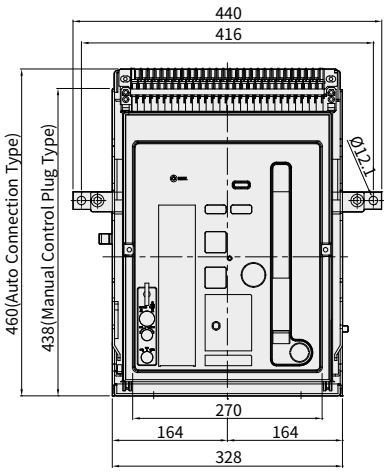

3P

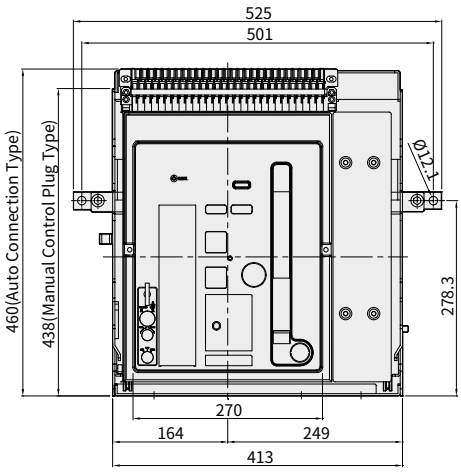

4P

Vertical Type

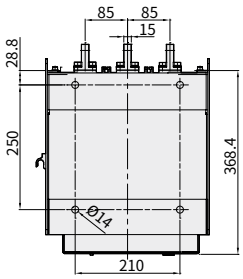

[HGS/HGN 630 ~ 1,600 A]

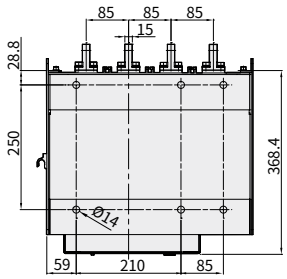

[HGN 2,000 A]

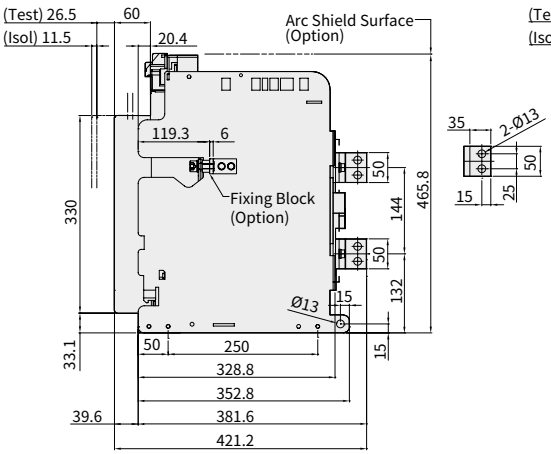

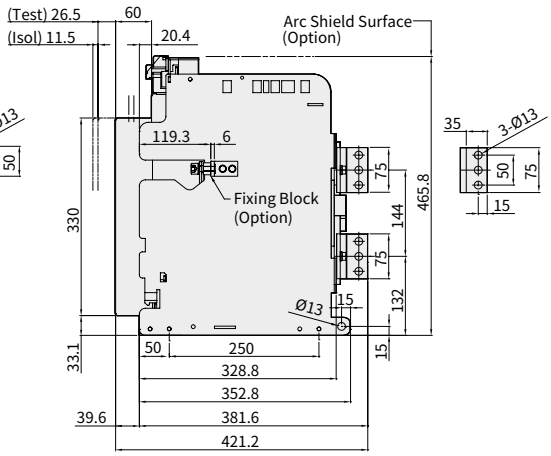

※ The drawing dimension of this page may be subject to change without prior notice.
As for the HGN draw-out type A type 2,000 A, only the vertical terminal can be applicable.

Unit : mm

Horizontal Type (630 ~ 1,600 A)

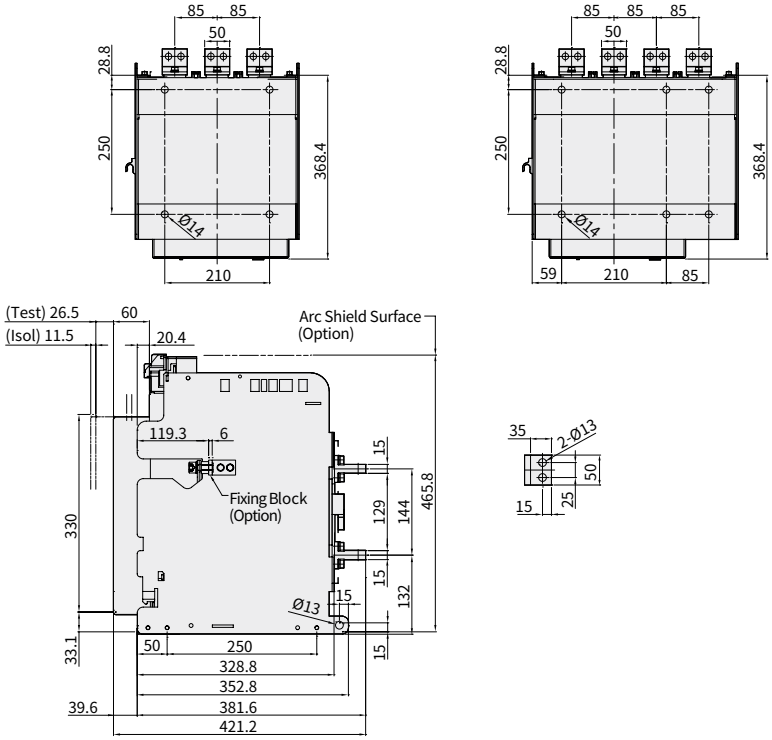

Front Type (630 ~ 1,600 A)

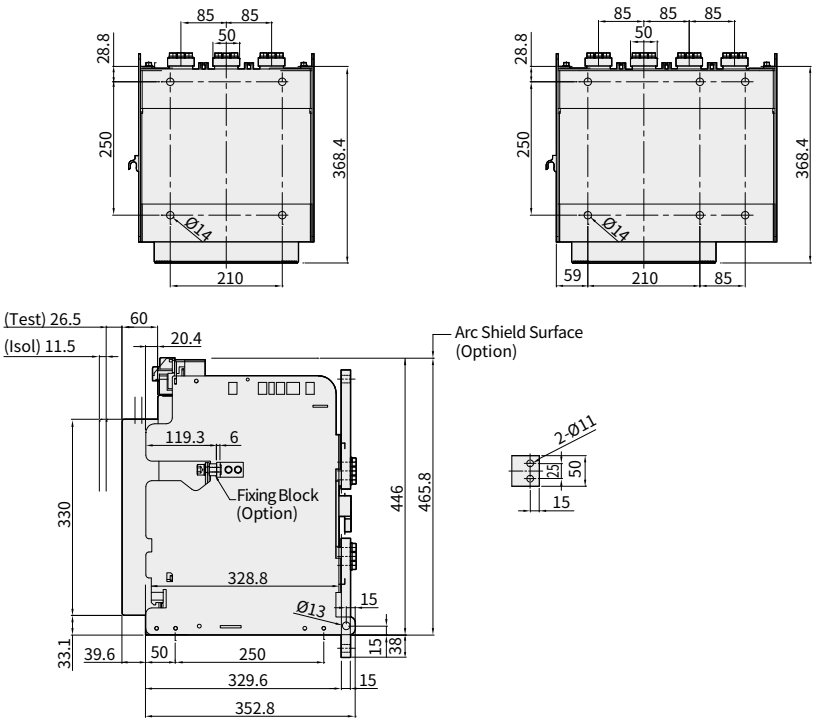

※ The drawing dimension of this page may be subject to change without prior notice.

Dimensions

HGS/HGN Fixed Type 2,000 (630) ~ 3,200 A (HGS/HGN20 (06) ~ 32 B Frame)

Unit : mm

Front

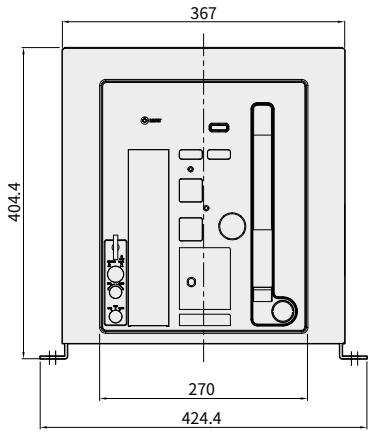

3P

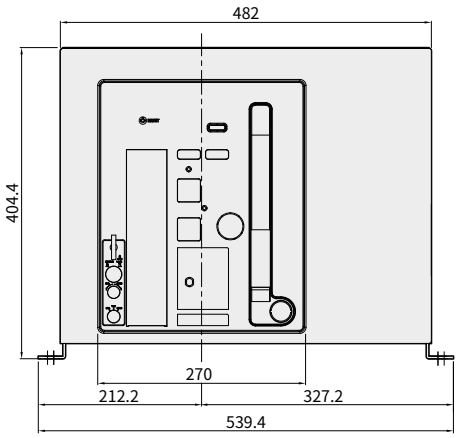

4P

Vertical Type

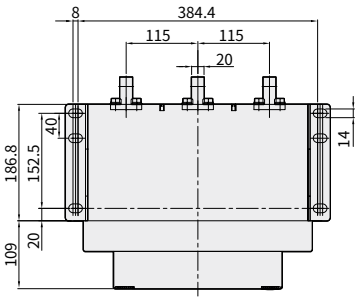

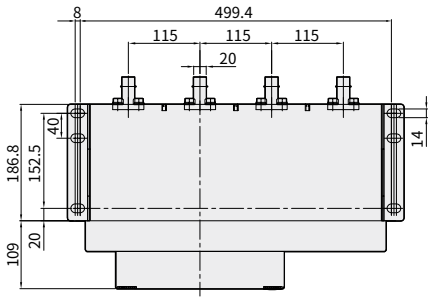

[630 ~ 2,500 A]

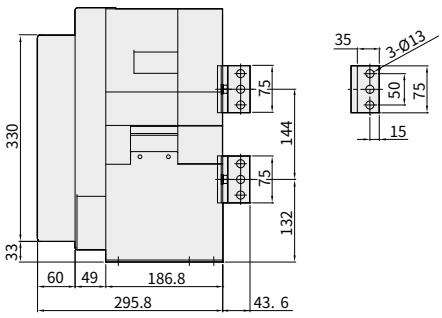

[3,200 A]

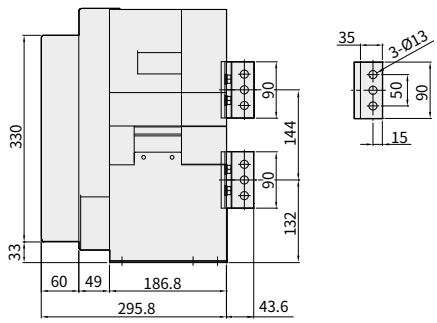

※ The drawing dimension of this page may be subject to change without prior notice.

Unit : mm

Horizontal Type

Model Name	Detail"A"
HGN20 (06) ~ 25	75
HGN32	90

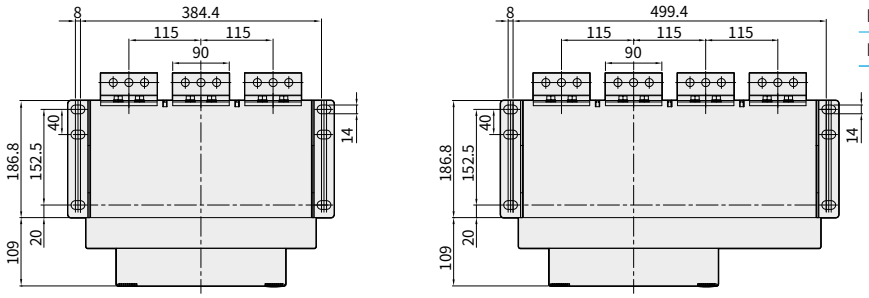

[2,000 ~ 2,500 A]

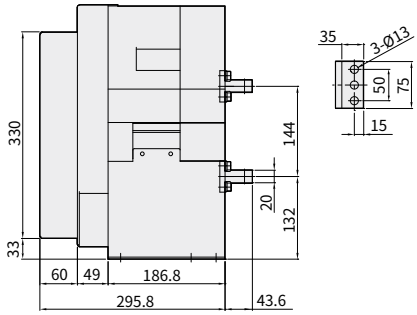

[3,200 A]

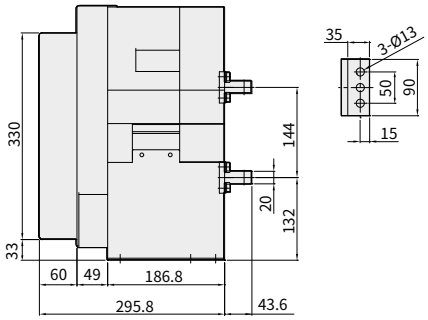

Front Type

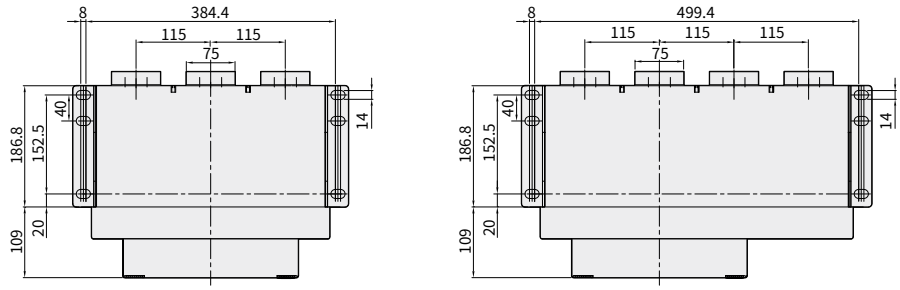

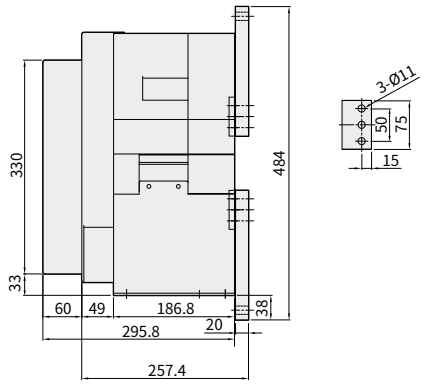

※ The drawing dimension of this page may be subject to change without prior notice.

Dimensions

HGS/HGN Draw-Out Type 2,000 (630) ~ 3,200 A (HGS/HGN20 (06) ~ 32 B Frame)

Unit : mm

Front

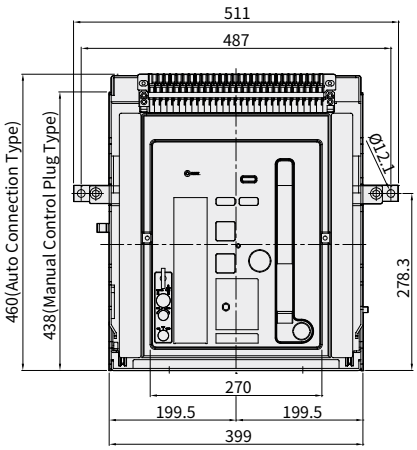

3P

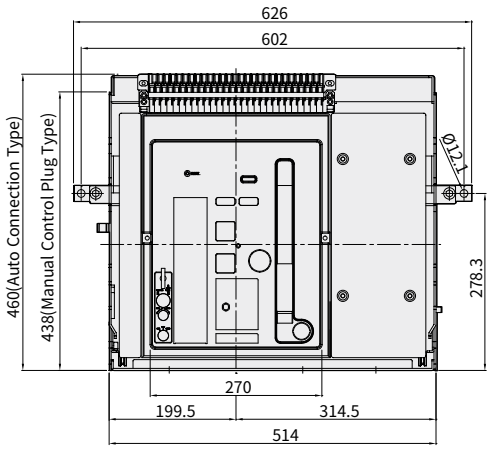

4P

Vertical Type

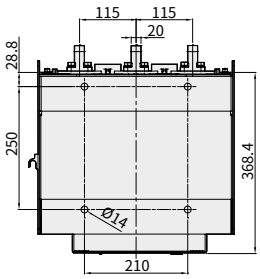

[630 ~ 2,500 A]

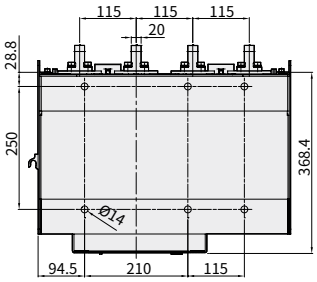

[3,200 A]

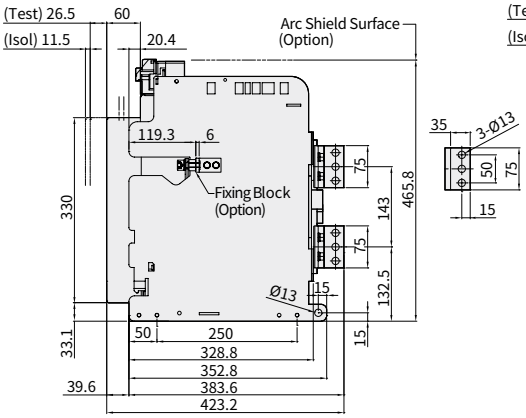

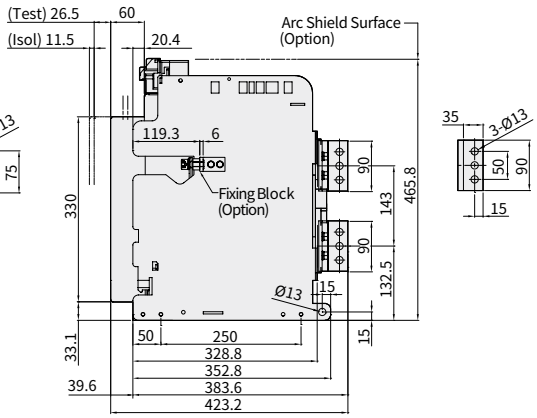

※ The drawing dimension of this page may be subject to change without prior notice.

Unit : mm

Horizontal Type

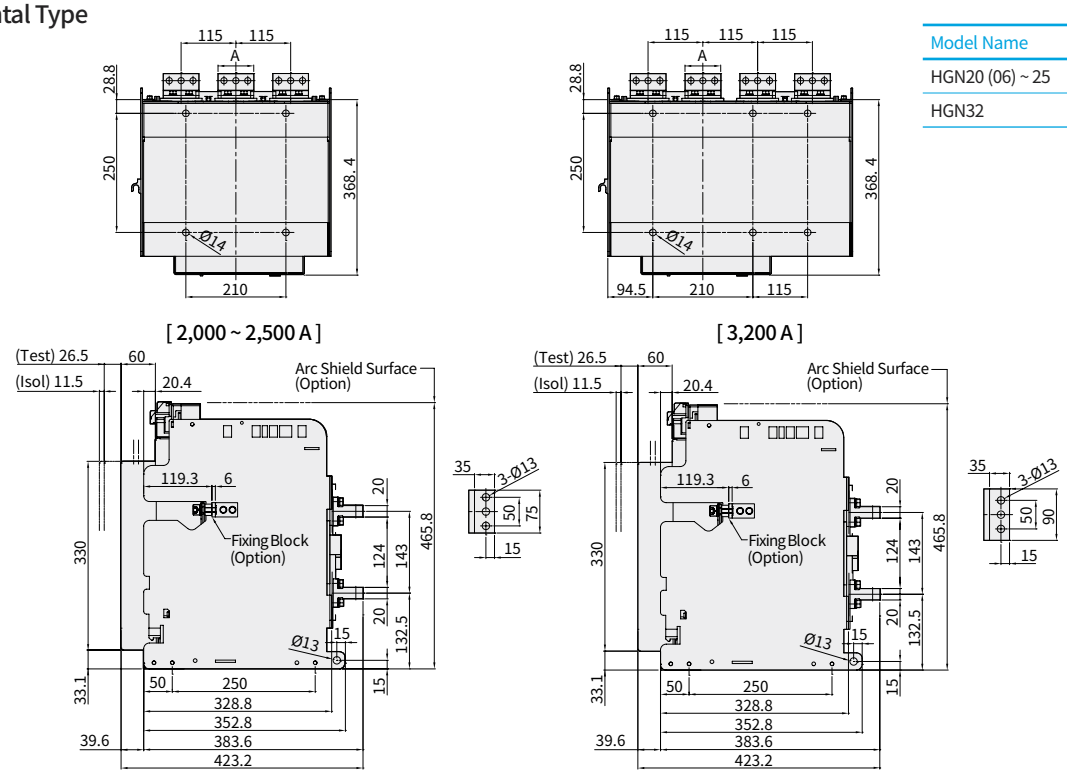

Model Name	Detail"A"
HGN20 (06) ~ 25	75
HGN32	90

Front Type

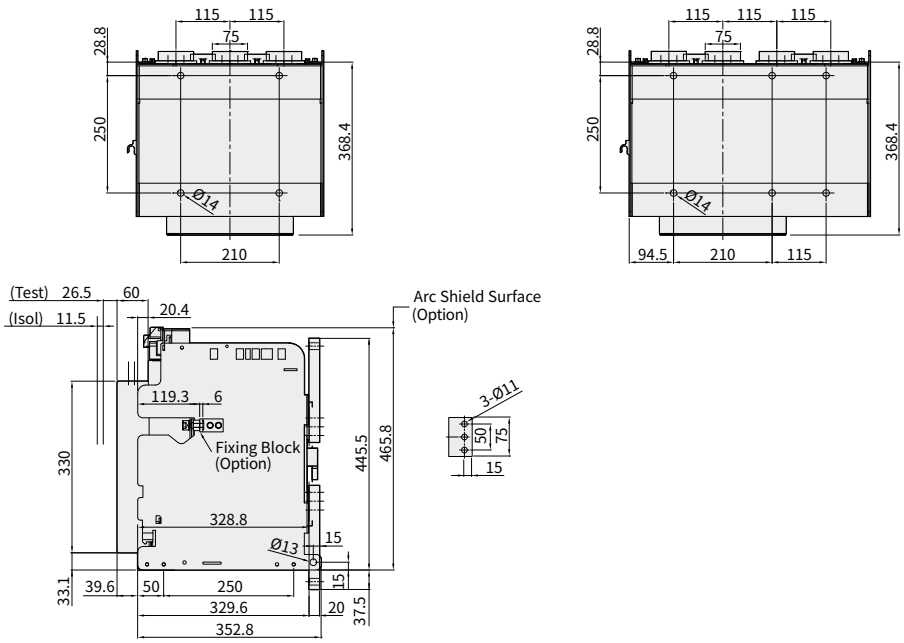

※ The drawing dimension of this page may be subject to change without prior notice.

Dimensions

HGN Fixed Type 4,000 A (HGN40 B Frame)

Unit : mm

Front

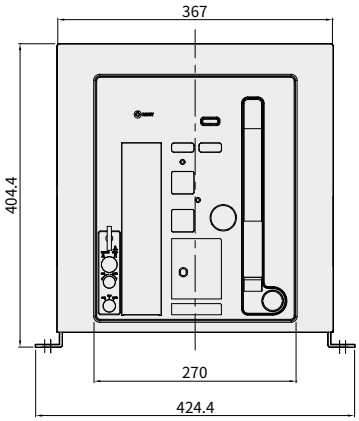

3P

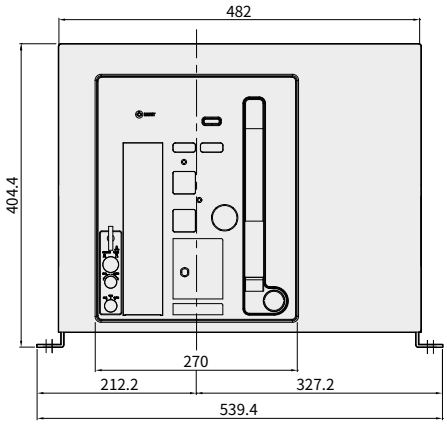

4P

Vertical Type

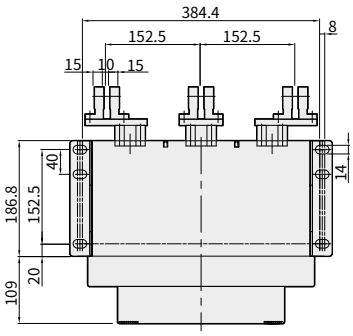

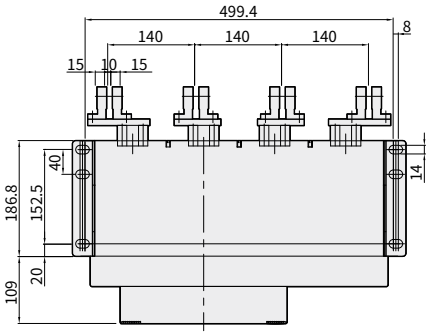

[4,000 A]

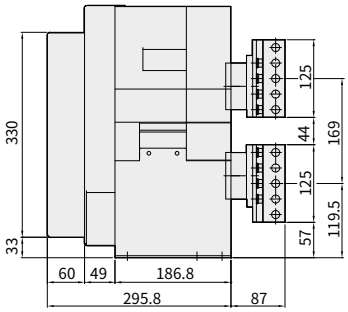

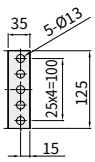

※ The drawing dimension of this page may be subject to change without prior notice.

Unit : mm

Horizontal Type

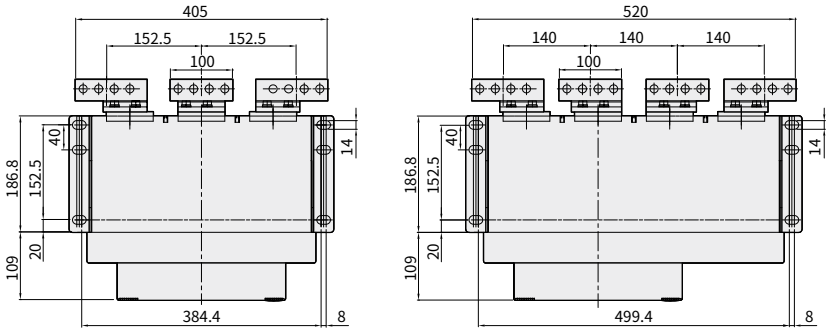

[4,000 A]

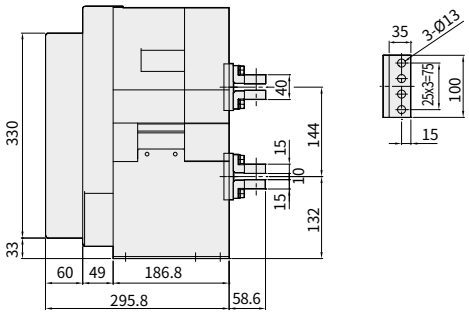

※ The drawing dimension of this page may be subject to change without prior notice.

Dimensions

HGN Draw-Out Type 4,000 A (HGN40 B Frame)

Unit : mm

Front

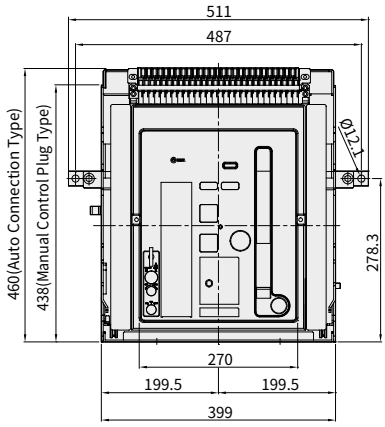

3P

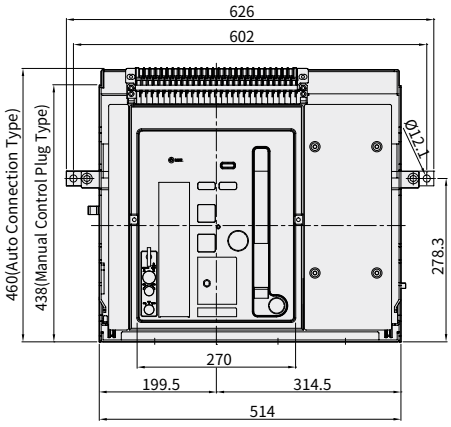

4P

Vertical Type

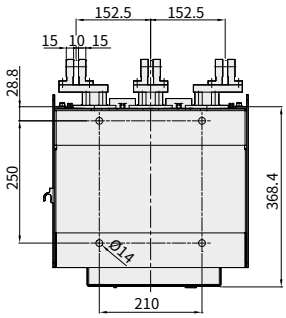

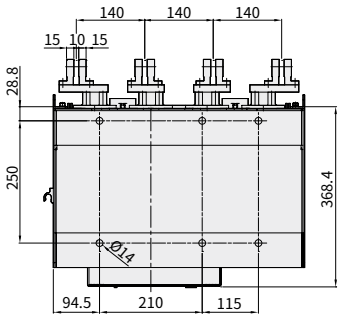

[4,000 A]

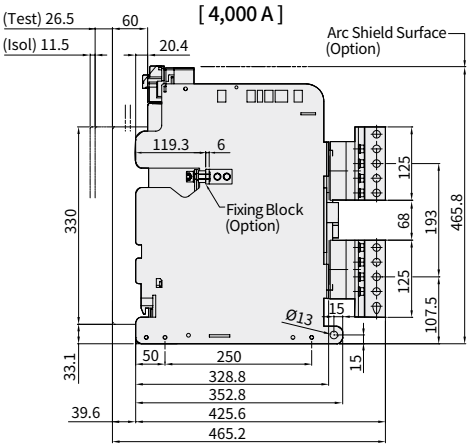

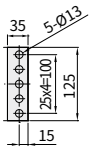

※ The drawing dimension of this page may be subject to change without prior notice.

Unit : mm

Horizontal Type

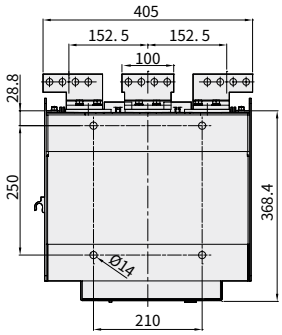

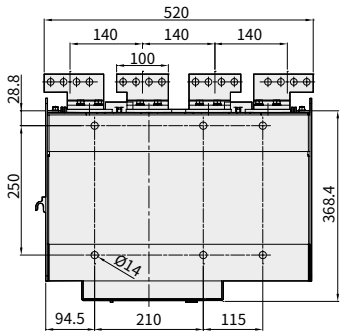

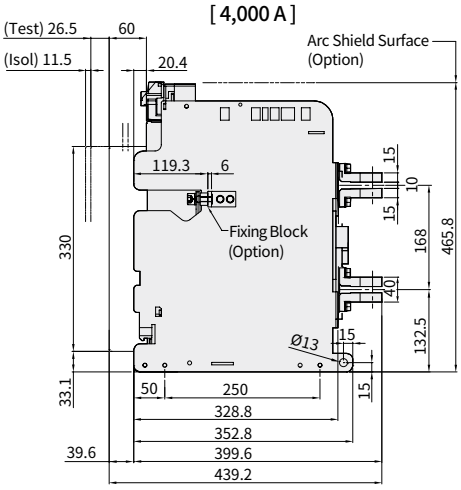

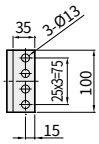

※ The drawing dimension of this page may be subject to change without prior notice.

Dimensions

HGN Fixed Type 4,000 (3,200) ~ 5,000 A (HGN40 (30) ~ 50 C Frame)

Unit : mm

Front

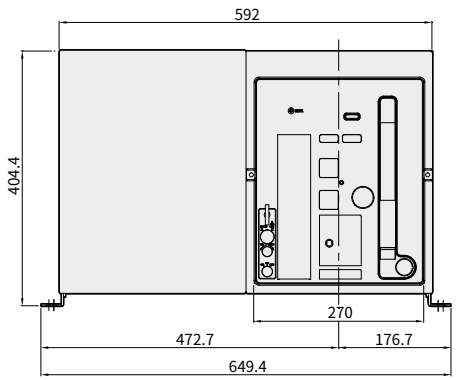

3P

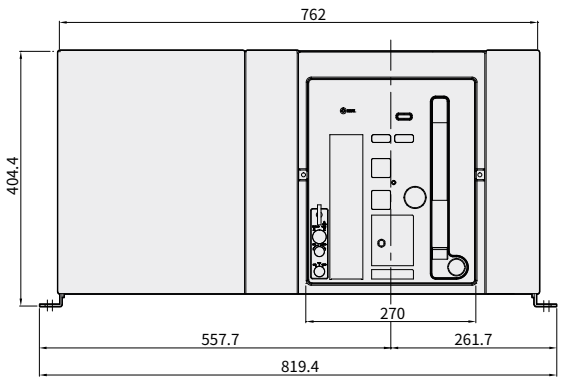

4P

Vertical Type

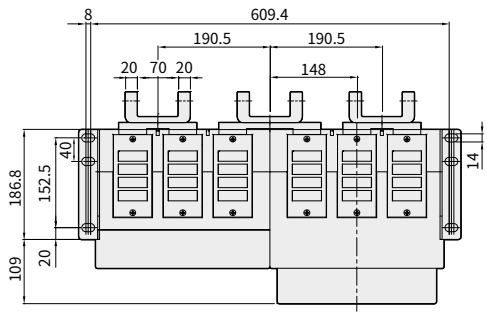

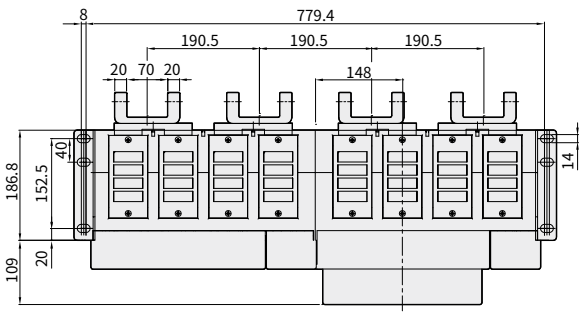

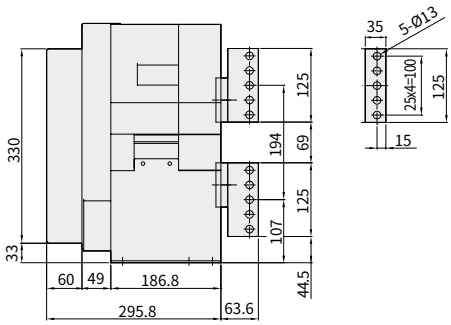

※ The drawing dimension of this page may be subject to change without prior notice.

Unit : mm

Horizontal Type

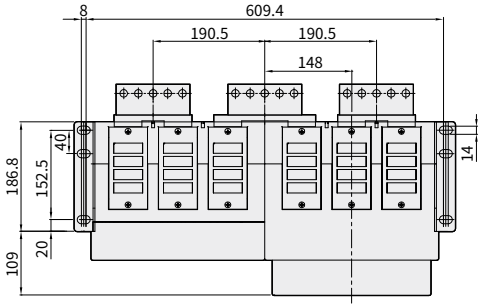

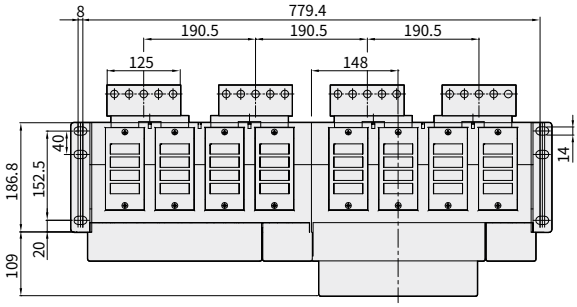

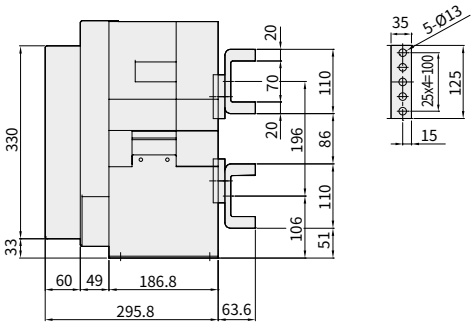

※ The drawing dimension of this page may be subject to change without prior notice.

Dimensions

HGN Draw-Out Type 4,000 (3,200) ~ 5,000 A (HGN40 (30) ~ 50 C Frame)

Unit : mm

Front

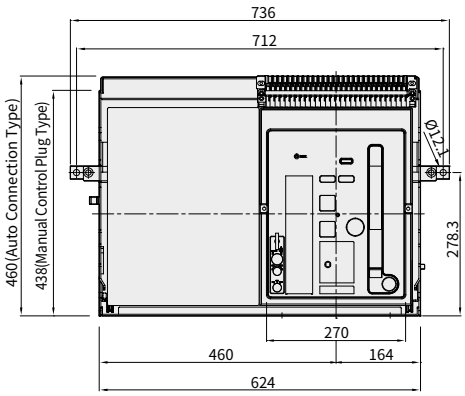

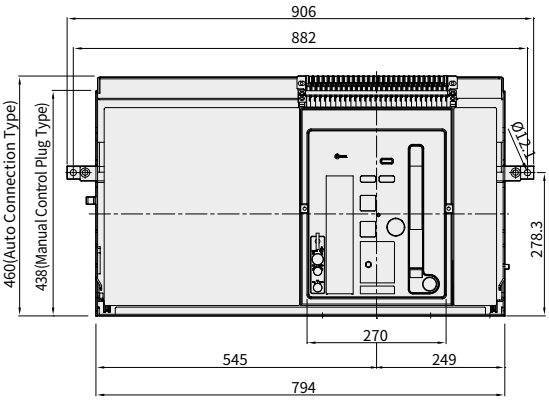

Vertical Type

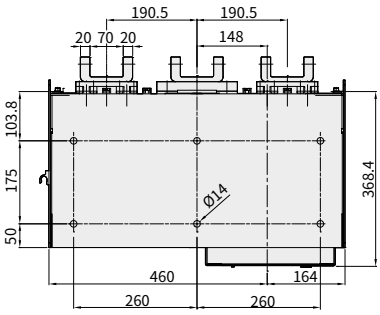

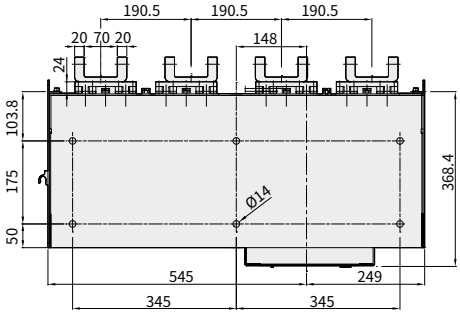

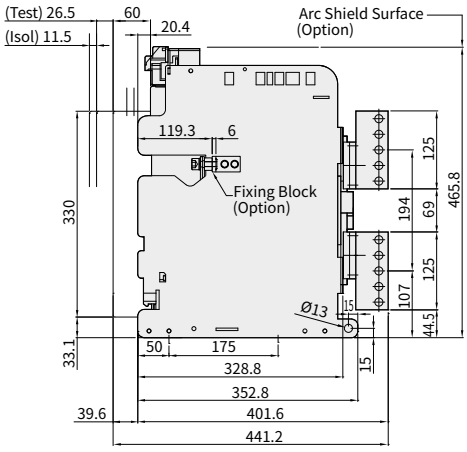

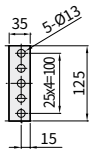

※ The drawing dimension of this page may be subject to change without prior notice.

Unit : mm

Horizontal Type

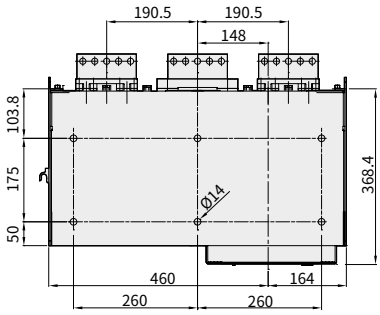

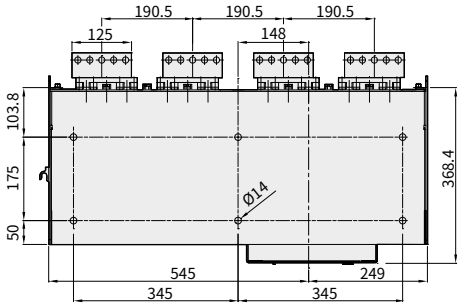

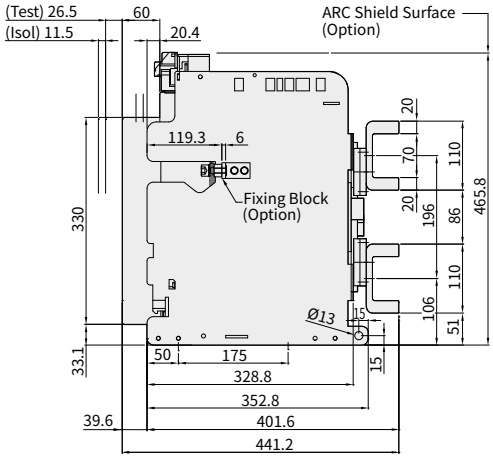

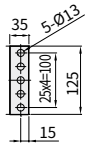

※ The drawing dimension of this page may be subject to change without prior notice.

Dimensions

HGN Fixed Type 4,000 ~ 6,300 A (HGN40 ~ 63 D Frame)

Unit : mm

Front

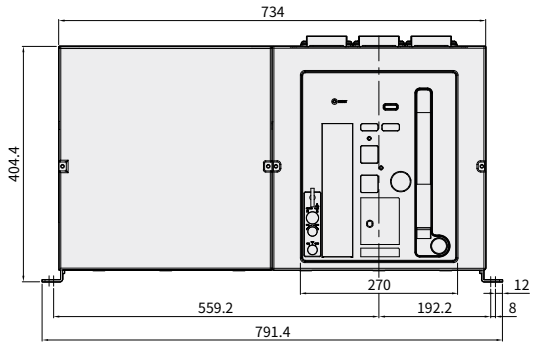

3P

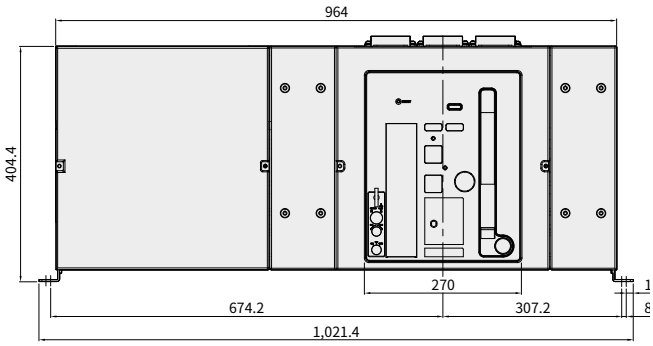

4P

Vertical Type

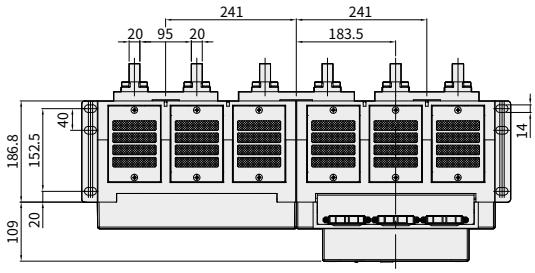

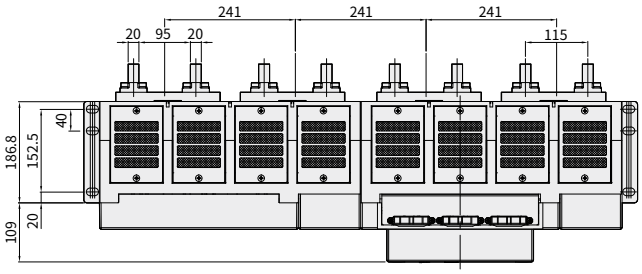

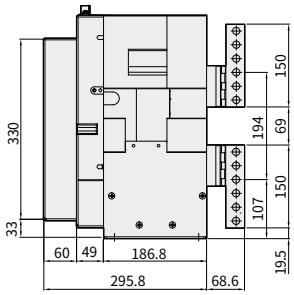

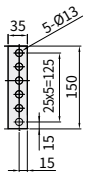

※ The drawing dimension of this page may be subject to change without prior notice.

Unit : mm

Horizontal Type

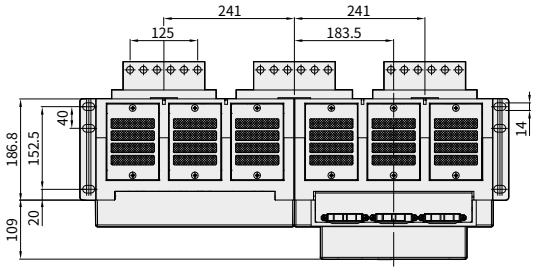

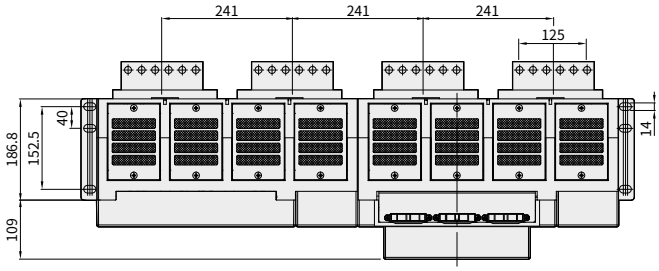

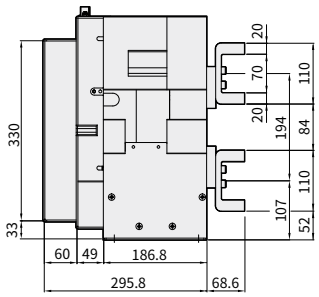

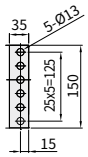

※ The drawing dimension of this page may be subject to change without prior notice.

Dimensions

HGN Draw-Out Type 4,000 A (HGN40 D Frame)

Unit : mm

Front

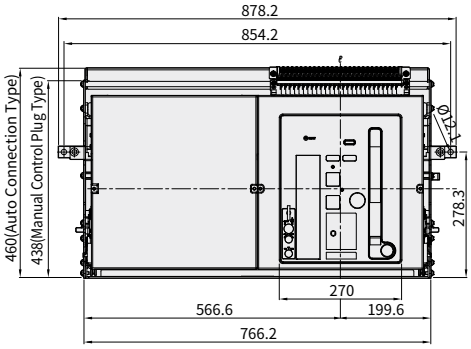

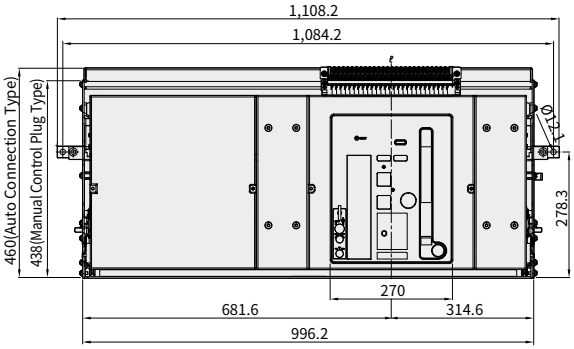

Vertical Type

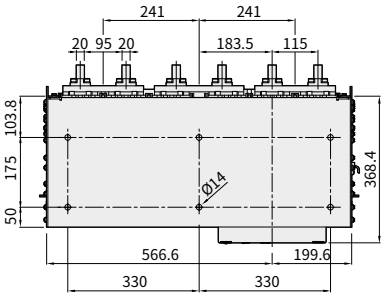

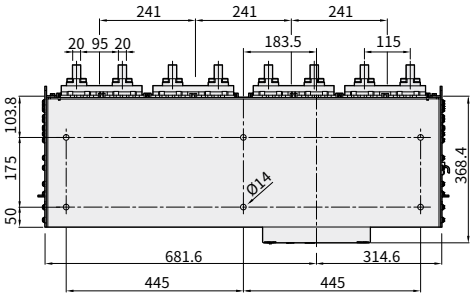

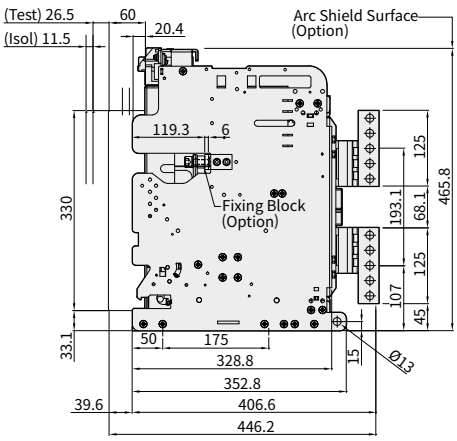

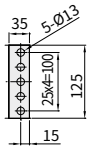

※ The drawing dimension of this page may be subject to change without prior notice.

Unit : mm

Horizontal Type

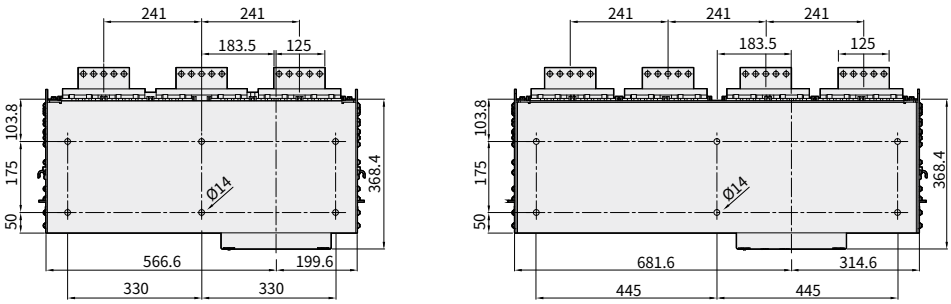

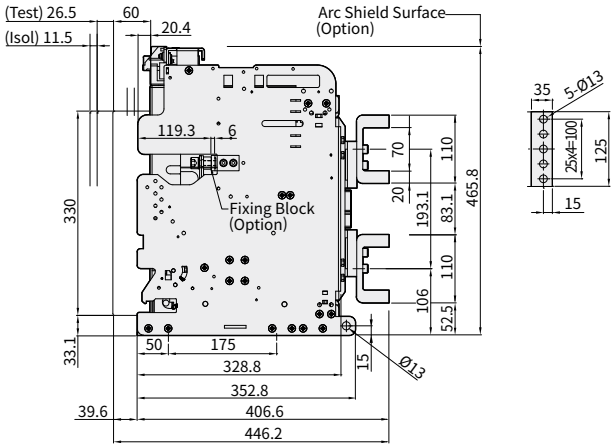

※ The drawing dimension of this page may be subject to change without prior notice.

Dimensions

HGN Draw-Out Type 5,000 ~ 6,300 A (HGN50 ~ 63 D Frame)

Unit : mm

Front

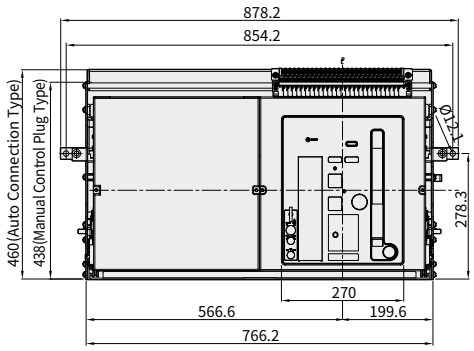

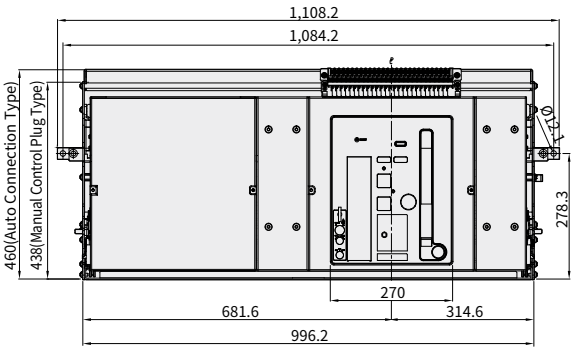

Vertical Type

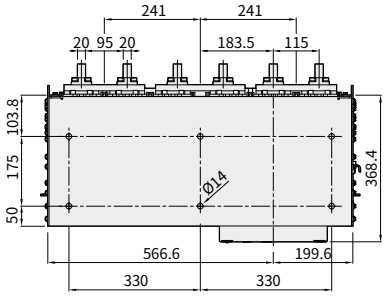

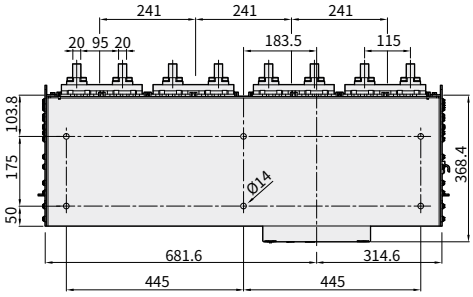

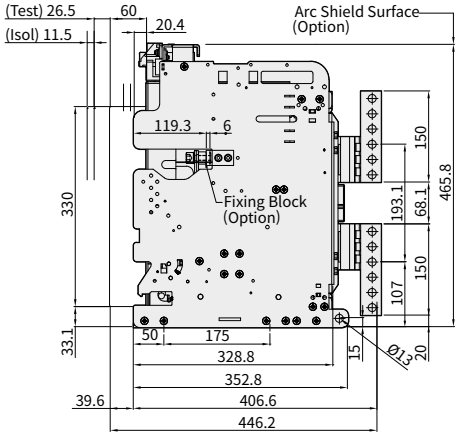

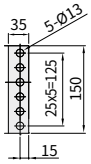

※ The drawing dimension of this page may be subject to change without prior notice.

Unit : mm

Horizontal Type

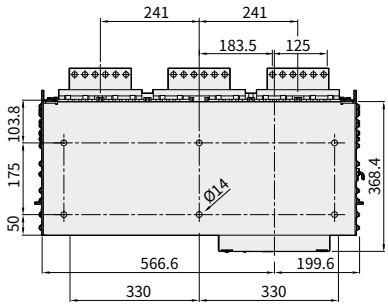

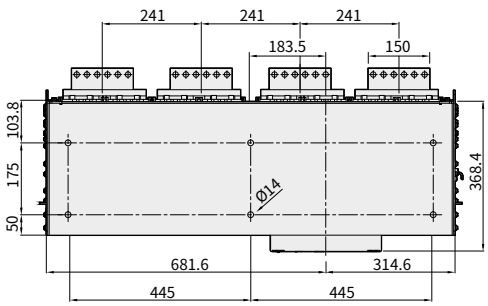

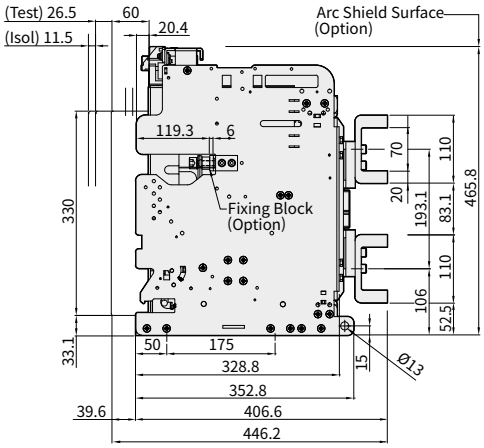

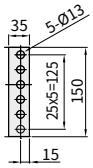

※ The drawing dimension of this page may be subject to change without prior notice.

Dimensions

Panel Cutting Dimension of HGS/HGN Fixed Type

Unit : mm

Panel Door Cut-Out (For Dust Cover)

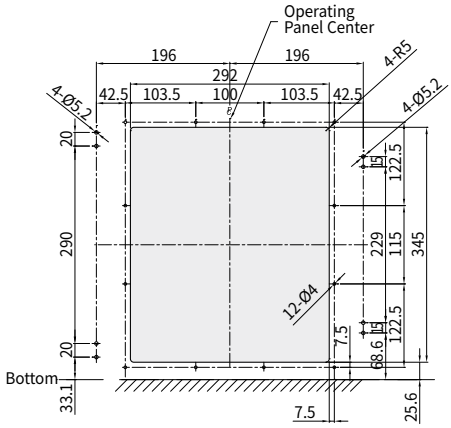

Panel Door Cut-Out (For Door Flange)

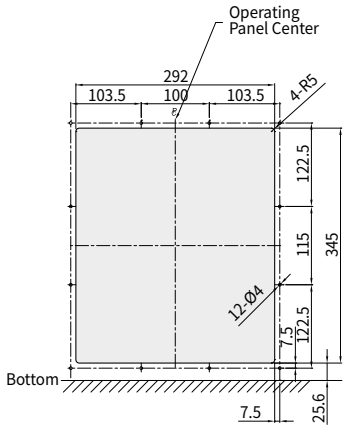

Side View

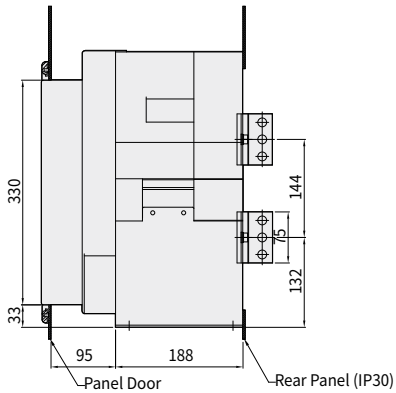

Rear Panel Cutting Size (For IP30)

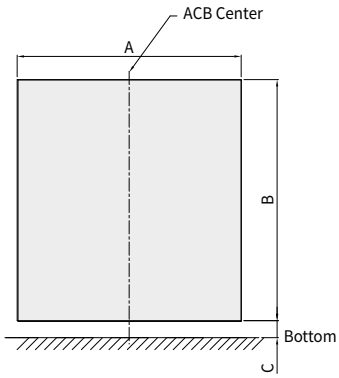

Detailed Dimensions of Real Panel Cutting

Model Name	A	B	C
HGN 06A3 ~ 20A3, HGS 06A3 ~ 16A3	283	355	25
HGN 06A4 ~ 20A4, HGS 06A4 ~ 16A4	368	355	25
HGN 06B3 ~ 40B3, HGS 20B3 ~ 32B3	354	355	25
HGN 06B4 ~ 40B4, HGS 20B4 ~ 32B4	469	355	25
HGN 32C3 ~ 50C3	579	355	25
HGN 32C4 ~ 50C4	749	355	25

※ The drawing dimension of this page may be subject to change without prior notice.

Panel Cutting Dimension of HGS/HGN Draw-Out Type

Unit : mm

Panel Door Cut-Out (For Dust Cover)

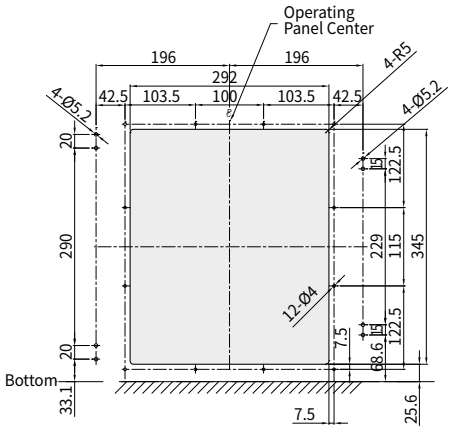

Panel Door Cut-Out (For Door Flange)

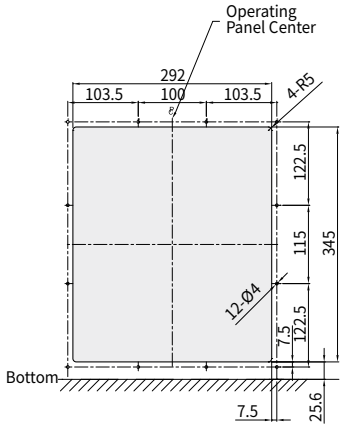

Side View

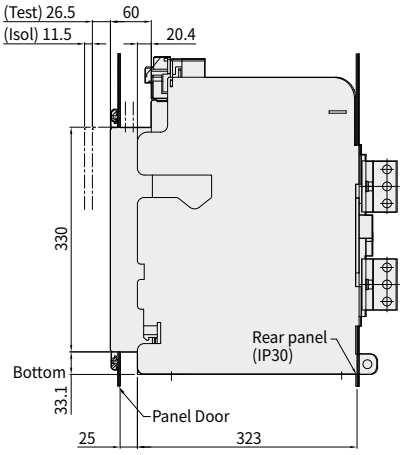

Rear Panel Cutting Size (For IP30)

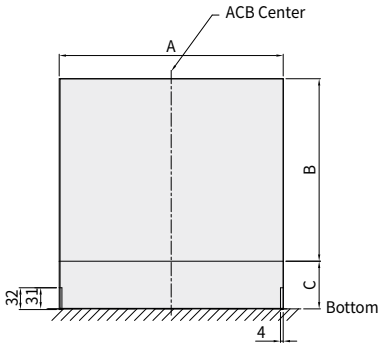

Detailed Dimensions of Real Panel Cutting

Model Name	A	B	C
HGN 06A3 ~ 20A3, HGS 06A3 ~ 16A3	329	268	70
HGN 06A4 ~ 20A4, HGS 06A4 ~ 16A4	414	268	70
HGN 06B3 ~ 40B3, HGS 20B3 ~ 32B3	400	298	55
HGN 06B4 ~ 40B4, HGS 20B4 ~ 32B4	515	298	55
HGN 32C3 ~ 50C3	625	338	35
HGN 32C4 ~ 50C4	795	338	35

※ The drawing dimension of this page may be subject to change without prior notice.

Circuit Diagrams

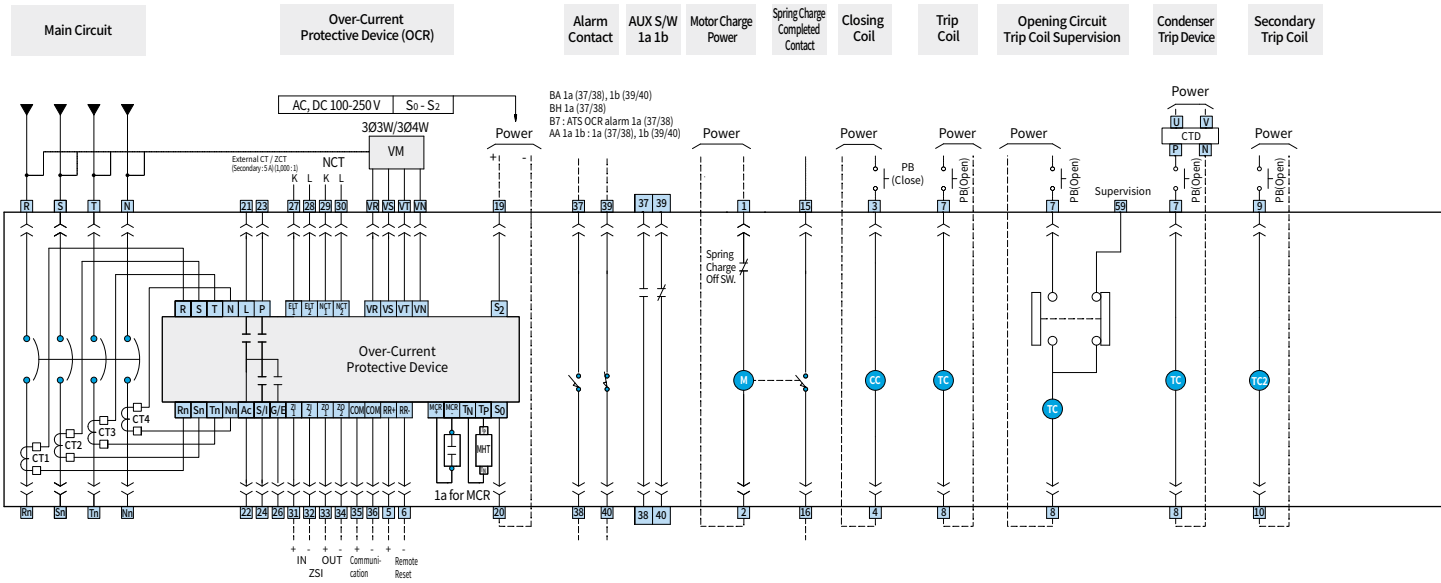

Symbol Description

CT	Current Transformer
L	LTD Terminal
PT	Pre-Trip Alarm
G	Ground Fault Contact
S / I	STD/INST Contact
Ac	Common Contact
NCT	NCT (Neutral CT) Input
ZI	Zone Selective Interlock Input
ZO	Zone Selective Interlock Output
MCR +,-	MCR Input Terminal
Tp / Tn	MHT Output Terminal
M	Charging Motor
CC	Close Coil
TC	Trip Coil
UVT	Under-Current Voltage Trip Coil
CT	Magnetic Hold Trigger
SO /S2	OCR Power

• RR : Remote Reset • VM : Voltage Module • VR ~ VN : Voltage Phase Input
• R ~ N : Current Input • Rn ~ Nn : Current Input

Terminal Description

1 2	Charge Motor Power
3 4	Closing Coil Power
7 8	Trip Coil Power
9 10	UVT Coil Power
15 16	Spring Charge Switch
19 20	OCR Control Power
22 21	LTD Contact
22 23	Pre-Trip Alarm/Temperature Alarm Contact
22 24	STD/INST Contact
22 26	GFT/ELT Contact
22 30	NCT (Neutral CT) Input Terminal
31 ~ 34	ZSI (Zone Selective Interlock)
41 ~ 60	Auxiliary Contact
61 ~ 93	Position Switch

—— Manufacture's Wiring
---- User's Wiring
Disconnecting Device (Draw-Out Type)

※ This circuit diagram is equipped with the 'GPR-LA' type of OCR and please refer to page 35 to 38 for other types of OCR.

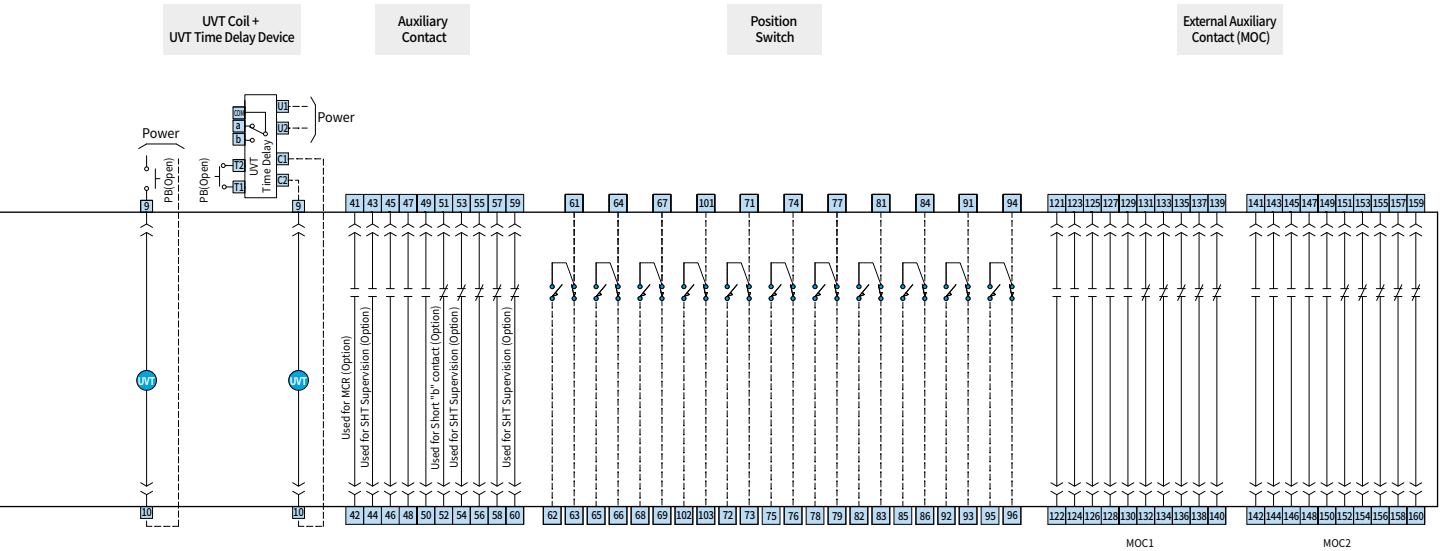

Test Position	Connection Position	Isolation Position	Insert Position
61-62 ON	71-72 ON	81-82 ON	84-85 ON
61-63 OFF	71-73 OFF	81-83 OFF	84-86 OFF
64-65 ON	74-75 ON	84-85 ON	91-92 ON
64-66 OFF	74-76 OFF	84-86 OFF	91-93 OFF
67-68 ON	77-78 ON		94-95 ON
67-69 OFF	77-79 OFF		94-96 OFF
101-102 ON			
101-103 OFF			

Control Jack Lay-Out

OCR																Operating					Auxiliary Switch									
POW	OCR Contact					ELT	N-CT	ZSI		COM	Temp		V Input			M	CC	TC	UVT	CHA	1a	2a	3a	4a	5a	1b	2b	3b	4b	5b
	COM	L	S/I	P/T	G/E																									
19	21		23		27		29	31	33	35	37	39	VR	VT		1	3	7	9	15	41	43	45	47	49	51	53	55	57	59
20	22	24		26		28	30	32	34	36	38	40	VS	VN		2	4	8	10	16	42	44	46	48	50	52	54	56	58	60
OCR Protection Relay																Operating Circuit					Auxiliary Switch									

OCR															
POW	OCR Contact					ELT	N-CT	ZSI		COM	Temp		V Input		
	COM	L	S/I	P/T	G/E										
19	21		23		27		29	31	33	35	37	39	VR	VT	
20	22	24		26		28	30	32	34	36	38	40	VS	VN	

- GPR Protection Relay -

Operating				
M	CC	TC	UVT	CHA
1	3	7	9	15
2	4	8	10	16

- Operating Circuit -

Auxiliary Switch									
1a	2a	3a	4a	5a	1b	2b	3b	4b	5b
41	43	45	47	49	51	53	55	57	59
42	44	46	48	50	52	54	56	58	60

- Auxiliary Switch -

Order Code

HGN Type

HGN	12	A	3	J	M2
Model Name	Rated Frame	Frame Category & Neutral Pole	No. of Poles	Mounting Method	Charging Motor Power

Model Name

HGN	Air Circuit Breakers

Rated Frame

6	630 A
8	800 A
10	1,000 A
12	1,250 A
16	1,600 A
20	2,000 A [1]
6	630 A
8	800 A
10	1,000 A
12	1,250 A
16	1,600 A
20	2,000 A
25	2,500 A
32	3,200 A
40	4,000 A
32	3,200 A
40	4,000 A
50	5,000 A
40	4,000 A
50	5,000 A
63	6,300 A

Frame Category & Neutral Pole

A	630 ~ 2,000 AF 3/4P Standard RST (N)
W	630 ~ 2,000 AF 4P Reverse Phase NRST
B	630 ~ 4,000 AF 3/4P Standard RST (N)
X	630 ~ 4,000 AF 4P Reverse Phase NRST
C	3,200 ~ 5,000 AF 3/4P Standard RST (N)
Y	3,200 ~ 5,000 AF 4P Reverse Phase NRST
D	4,000 ~ 6,300 AF 3/4P Standard RST (N)
Z	4,000 ~ 6,300 AF 4P Reverse Phase NRST

No. of Poles

3	3 Pole
4	4 Pole

Mounting Method

Independent Release of Draw-Out Type (Control Power) of Main Unit	
A	Auto Connection
J	Manual Connection
Fixed Type (Terminal Form)	
H	Horizontal Type
V	Vertical Type
T	Upper Side: Horizontal/ Lower Side: Vertical
L	Upper Side: Vertical/ Lower Side: Horizontal
P [2]	Front Type and Mounting Type Selected by Customer
Draw-Out Type (Combined with Cradle)	
B	Auto Connection + Horizontal Type
C	Auto Connection + Vertical Type
D	Auto Connection + Upper Side: Horizontal / Lower Side: Vertical
E	Auto Connection + Upper Side: Vertical / Lower Side: Horizontal
G [2]	Auto Connection + Front Type/Mounting Type Selected by Customer
K	Manual Connection + Horizontal Type
M	Manual Connection + Vertical Type
N	Manual Connection + Upper: Horizontal/ Lower: Vertical
Q	Manual Connection + Upper Side: Vertical/ Lower Side: Horizontal
R [2]	Manual Connection + Front Type/Mounting Type Selected by Customer

Charging Motor Power

M0	Manual Type
M1	AC/DC 110 V
M2	AC/DC 220 V
M3	AC 380 V [3]
M4	AC 440 V [3]
M7	DC 24 V
M8	DC 48 V
M9	DC 125 V

※ 1) A frame, 2,000 A is only available for vertical terminal bus bar arrangement.
2) P, G, R type of fixed terminal bus bar arrangement should be ordered per terminal and mounted personally. (Refer to the additional components). Applicable frames are A06 ~ 16, B06 ~ 32.
3) Charging motor AC 380 V, AC 440 V are currently under development.
4) CT for Over-Current
- A/W Frame : 200 ~ 2,000 A
- B/X Frame : 400 ~ 4,000 A
- C/Y Frame : 3,200 ~ 5,000 A
- D/Z Frame : 4,000 ~ 6,300 A
5) When applying OCR high-end type P, H type, place an order for voltage module (HGNS VM) additionally for mounting.

C2

Closing Coil

C0	N/A
C1	AC/DC 110 V
C2	AC/DC 220 V
C3	AC 380 V
C4	AC 440 V
C7	DC 24 V
C8	DC 48 V
C9	DC 125 V

S2

Trip Coil

S0	N/A
S1	AC/DC 110 V
S2	AC/DC 220 V
S3	AC 380 V
S4	AC 440 V
S7	DC 24 V
S8	DC 48 V
S9	DC 125 V

Trip Supervision Coil

T1	AC/DC 110 V
T2	AC/DC 220 V
T3	AC 380 V
T4	AC 440 V
T7	DC 24 V
T8	DC 48 V
T9	DC 125 V

61

Over-Current Trip

General Feeder	
00	N/A
50 Hz	
50	GPR-LN
51	GPR-LA
52	GPR-LAG
53	GPR-LAZ
54	GPR-LP [5]
55	GPR-LH [5]
60 Hz	
60	GPR-LN
61	GPR-LA
62	GPR-LAG
63	GPR-LAZ
64	GPR-LP [5]
65	GPR-LH [5]
Generator	
50 Hz	
57	GPR-SN
58	GPR-SA
59	GPR-SP [5]
60Hz	
67	GPR-SN
68	GPR-SA
69	GPR-SP [5]

K

CT [4]

0	OCR N/A
O	200 A
V	320 A
E	400 A
T	630 A
H	800 A
J	1,000 A
K	1,250 A
L	1,600 A
M	2,000 A
N	2,500 A
P	3,200 A
Q	4,000 A
S	5,000 A
X	6,300 A

AB

Parts for Main Unit

INST (UVT Coil)	
U1	AC/DC 110 V
U2	AC/DC 220 V
U3	AC 380 V
U4	AC 440 V
U7	DC 24 V
U8	DC 48 V
U9	DC 125 V
Secondary Trip Coil	
S1	AC/DC 110 V
S2	AC/DC 220 V
S3	AC 380 V
S4	AC 440 V
S7	DC 24 V
S8	DC 48 V
S9	DC 125 V
AM	On/Off Button Lock Device
AA	Auxiliary Switch (Additional 1a 1b)
AB	Key Lock Device (Prevent ON)
B8	OCR MCR
BR	OCR Manual Reset Function
BA	OCR Manual Reset & Alarm S/W 2a
BH	CR Manual Reset + High Capacity Alarm S/W 1a
B0	Mechanical Interlock Device
B6	Spring Charge Switch
AG	Door Flange
BT	Closing Preparation Contact (B6 and CT cannot be Combined)
MR	Marine Switchgear

Parts Mounted on Cradle (Only Applicable when Placing an Order for Combination Type)

Time Delay Type (UVT Coil + UVT Controller)	
V1	AC/DC 110 V
V2	AC/DC 220 V
V3	AC 380 V
V4	AC 440 V
V9	DC 125 V
Position S/W	
AQ	Test 1C, Connected 1C
AR	Connected 2C
AS	Test 2C
AT	Isolated 1C, Inserted 1C
AU	Inserted 2C
AV	Isolated 2C
P4	Test 2C, Connected 2C
PT	Test 4C
PS	Isolated 1C, Test 1C, Connected 2C
PQ	Inserted 1C, Isolated 1C, Test 1C, Connected 1C
P8	Inserted 2C, Isolated 2C, Test 2C, Connected 2C
PR	Inserted 1C, Isolated 1C, Test 3C, Connected 3C
BC	Auto Connection Control Terminal's Safety Cover
MC	External Auxiliary Contact (MOC) 10a10b
AK	Short "b" Contact
AE	Safety Shutter
AX	Arc Shield
AF	Fixing Block
AW	Miss Insertion Preventer
TM	Temperature Sensor Bracket
ATS Production	
BAB7	Emergency Power Transfer
MR	Marine Switchgear

- U☐ is only applicable when instantaneous type and only the UVT coil is installed. When using time delay type, place a separate order for the time delay type of controller (HGNS ~) and install externally.
- V☐ is only applicable when time delay type is applied and the UVT coil is installed in the main unit while the time delay type of controller is installed at the side of the cradle. In case of dimension issues, place an order for HGNS V☐ for separate installation.
- B0 : The mechanical interlock device has to be ordered separately and when B0 is marked, only the components interlocked inside the main unit are assembled for release. (Refer to additional components).
- When S☐ Secondary trip is applied, UVT coil cannot be applied at the same time.
- When using T☐ trip coil monitoring contact, it becomes 4a3b and when using MCR function of B8 OCR, it can be used as 4a5b. When both functions are applied, 3a3b can be possible.
- In the order code for the main unit only (A/J/Fixed type), combination with cradle accessories is not possible and the cradle accessory arrangement is only possible when purchased with cradle arrangement. For the independent release of the main unit, place a separate order (HGNS ~) (refer to additional components).
- Position switch cannot be overlapped for use and can only be attached only at the right side of cradle. In case a combination other than the combination indicate is required, make an inquiry separately.
- Mechanical interlock device (B0), external auxiliary contact (MC) and fixing block (AF) cannot be used together.
- BC : The control terminal's safety cover is only available for the auto connection.
- AK : Short "b" is only available for auto connection and is attached to 51, 52. It can be attached as much as the number of "B" contact so upon additional mounting, place a separate order (HGNS ~).
- AG : Originally, it is attached separately but upon release, the front cover is inserted when shipped.
- MR : AE, AG, AF, AM are attached as a standard option, so the relevant accessories are not marked separately.
- AA and BA (BH) cannot be attached at the same time.
- UVT and Secondary Trip Coil cannot be attached at the same time.

Order Code

When Placing an Order for the Cradle

DHN	12	A	3	A	H	AE
Model Name	Rated Frame	Frame Category & Neutral Pole	No. of Poles	Control Terminal Connection	Terminal Bus Bar Arrangement	Accessories

Model Name

DHN	Air Circuit Breakers Cradle

Rated Frame

16	DHN06 ~ 16A (W)
20	DHN20A (W) 1)
25	DHN06 ~ 25B (X)
32	DHN32B (X)
40	DHN40B (X)
50	DHN32 ~ 50C (Y)
40	DHN40D (Z)
63	DHN50 ~ 63D (Z)

Frame Category & Neutral Pole

A	630 ~ 1,600 A 3/4P Standard RSTN Reverse Phase NRST
B	630 ~ 4,000 A 3/4P Standard RSTN Reverse Phase NRST
C	3,200 ~ 5,000 A 3/4P Standard RSTN Reverse Phase NRST
D	4,000 ~ 6,300 A 3/4P Standard RSTN Reverse Phase NRST

No. of Poles

3	3 Pole
4	4 Pole

Control Terminal Connection

A	Auto Connection
J	Manual Connection

Terminal Bus Bar Arrangement

H	Horizontal Type
V	Vertical Type
T	Upper Side : Horizontal/ Lower Side : Vertical
L	Upper Side : Vertical/ Lower Side : Horizontal
P 2)	Front Type and Mounting Type Selected by Customer

Accessories

AE	Safety Shutter

※ AE : Safety shutter lock is supplied with safety shutter.

※ Marking upon Shipping of Cradle
- DHN06/08/10/12/16A (W) > DHN06 ~ 16A (W)
- DHN20A (W) > DHN20A (W)
- DHN06/08/10/12/16/20/25B (X) > DHN06 ~ 25B (X)
- DHN32B (X) > DHN32B (X)
- DHN40B (X) > DHN40B (X)
- DHN32/40/50C (Y) > DHN32 ~ 50C (Y)
- DHN40/50D (Z) > DHN40 ~ 50D (Z)

※ 1) A frame, 2,000 A is only available for vertical terminal bus bar arrangement.
2) P type of fixed terminal bus bar arrangement should be ordered per terminal and mounted personally. (Refer to the additional components). Applicable frames are A06 ~ 16, B06 ~ 32.

Order Code

HGS Type

HGS	12	A	3	J	M2
Model Name	Rated Frame	Frame Category & Neutral Pole	No. of Poles	Mounting Method	Charging Motor Power

Model Name

HGS	Air Circuit Breakers

Rated Frame

6	630 A
8	800 A
10	1,000 A
12	1,250 A
16	1,600 A
20	2,000 A
25	2,500 A
32	3,200 A

Frame Category & Neutral Pole

A	630 ~ 1,600 AF 3/4P Standard RST (N)
W	630 ~ 1,600 AF 4P Reverse Phase NRST
B	2,000 ~ 3,200 AF 3/4P Standard RST (N)
X	2,000 ~ 3,200 AF 4P Reverse Phase NRST

No. of Poles

3	3 Pole
4	4 Pole

Mounting Method

Independent Release of Draw-Out Type (Control Power) of Main Unit	
A	Auto Connection
J	Manual Connection
Fixed Type (Terminal Form)	
H	Horizontal Type
V	Vertical Type
T	Upper Side : Horizontal/ Lower Side : Vertical
L	Upper Side : Vertical/ Lower Side : Horizontal
P [1]	Front Type and Mounting Type Selected by Customer
Draw-Out Type (Combined with Cradle)	
B	Auto Connection + Horizontal Type
C	Auto Connection + Vertical Type
D	Auto Connection + Upper Side : Horizontal/ Lower Side : Vertical
E	Auto Connection + Upper Side : Vertical/ Lower Side : Horizontal
G [1]	Auto Connection + Front Type/Mounting Type Selected by Customer
K	Manual Connection + Horizontal Type
M	Manual Connection + Vertical Type
N	Manual Connection + Upper Side : Horizontal/ Lower Side : Vertical
Q	Manual Connection + Upper Side : Vertical/ Lower Side : Horizontal
R [1]	Manual Connection + Front Type/Mounting Type Selected by Customer

Charging Motor Power

M0	Manual type
M1	AC/DC 110 V
M2	AC/DC 220 V
M3	AC 380 V [2]
M4	AC 440 V [2]
M5	DC 24 V
M6	DC 48 V
M9	DC 125 V

※ 1) P, G, R type of fixed terminal bus bar arrangement should be ordered per terminal and mounted personally. (Refer to the additional components).
2) Charging motor AC 380 V, AC 440 V are currently under development.
3) O, V can only be applicable to frame A.
- B frame can be applied above 400 A of CT.
4) When applying LP type of OCR, place an order for the voltage module (HGNS VM) additional for mounting.

C2

Closing Coil

C0	N/A
C1	AC/DC 110 V
C2	AC/DC 220 V
C3	AC 380 V
C4	AC 440 V
C7	DC 24 V
C8	DC 48 V
C9	DC 125 V

S2

Trip Coil

S0	N/A
S1	AC/DC 110 V
S2	AC/DC 220 V
S3	AC 380 V
S4	AC 440 V
S7	DC 24 V
S8	DC 48 V
S9	DC 125 V

61

Over-Current Trip

General Feeder	
00	N/A
50 Hz	
50	GPR-LN
51	GPR-LA
52	GPR-LAG
53	GPR-LAZ
54	GPR-LP [4]
60 Hz	
60	GPR-LN
61	GPR-LA
62	GPR-LAG
63	GPR-LAZ
64	GPR-LP [4]

K

CT [3]

0	OCR N/A
O	200 A
V	320 A
E	400 A
T	630 A
H	800 A
J	1,000 A
K	1,250 A
L	1,600 A
M	2,000 A
N	2,500 A
P	3,200 A

AB

Parts for Main Unit

INST (UVT Coil)	
U1	AC/DC 110 V
U2	AC/DC 220 V
U3	AC 380 V
U4	AC 440 V
U7	DC 24 V
U8	DC 48 V
U9	DC 125 V
Secondary Trip Coil	
S1	AC/DC 110 V
S2	AC/DC 220 V
S3	AC 380 V
S4	AC 440 V
S7	DC 24 V
S8	DC 48 V
S9	DC 125 V
AM	On/Off Button Lock Device
AA	Auxiliary Switch (Additional 1a 1b)
A5	Auxiliary Switch (Additional 5a 5b)
AB	Key Lock Device (Prevent ON)
B8	OCR MCR
BR	OCR Manual Reset Function
BA	OCR Manual Reset & Alarm S/W 2a
BH	CR Manual Reset + High Capacity Alarm S/W 1a
BT	Closing Preparation Contact (B6 and BT cannot be Applied Simultaneously (Overlapping Mounting)
B6	Spring Charge Switch
AG	Door Flange
A5	Auxiliary Switch (5 ~ 5b)

Parts Mounted on Cradle (Only Applicable when Placing an Order for Combination Type)

Time Delay Type (UVT Coil + UVT Controller)	
V1	AC/DC 110 V
V2	AC/DC 220 V
V3	AC 380 V
V4	AC 440 V
V9	DC 125 V
Position S/W	
AQ	Test 1C, Connected 1C
AR	Connected 2C
AS	Test 2C
AT	Isolated 1C, Inserted 1C
AU	Inserted 2C
AV	Isolated 2C
P4	Test 2C, Connected 2C
PT	Test 4C
PS	Isolated 1C, Test 1C, Connected 2C
PQ	Inserted 1C, Isolated 1C, Test 1C, Connected 1C
P8	Inserted 2C, Isolated 2C, Test 2C, Connected 2C
PR	Inserted 1C, Isolated 1C, Test 3C, Connected 3C
BC	Auto Connection Control Terminal's Safety Cover
AE	Safety Shutter
AX	Arc Shield
AF	Fixing Block

- U☐ is only applicable when instantaneous type and only the UVT coil is installed. When using time delay type, place a separate order for the time delay type of controller (HGNS ~) and install externally.
- V☐ is only applicable when time delay type is applied and the UVT coil is installed in the main unit while the time delay type of controller is installed at the side of the cradle. In case of dimension issues, place an order for HGNS V☐ for separate installation.
- B0 : The mechanical interlock device has to be ordered separately and when B0 is marked, only the components interlocked inside the main unit are assembled for release. (Refer to additional components).
- When S☐ Secondary trip is applied, UVT coil cannot be applied at the same time.
- When using T☐ trip coil monitoring contact, it becomes 4a4b and when using MCR function of B8 OCR, it can be used as 4a5b. When both functions are applied, 3a4b can be possible.
- In the order code for the main unit only (A/J/Fixed type), combination with cradle accessories is not possible and the cradle accessory arrangement is only possible when purchased with cradle arrangement. For the independent release of the main unit, place a separate order (HGNS ~) (refer to additional components).
- Position switch cannot be overlapped for use and can only be attached only at the right side of cradle. In case a combination other than the combination indicate is required, make an inquiry separately.
- Mechanical interlock device (B0), external auxiliary contact (MC) and fixing block (AF) cannot be used together.
- BC : The control terminal's safety cover is only available for the auto connection.
- AK : Short "b" is only available for auto connection and is attached to 51, 52. It can be attached as much as the number of "B" contact so upon additional mounting, place a separate order (HGNS ~).
- AG : Originally, it is attached separately but upon release, the front cover is inserted when shipped.
- AA and BA (BH) cannot be attached at the same time.
- UVT and Secondary Trip Coil cannot be attached at the same time.

Order Code

When Placing an Order for the Cradle

DHS	12	A	3	A	H	AE
Model Name	Rated Frame	Frame Category & Neutral Pole	No. of Poles	Control Terminal Connection	Terminal Bus Bar Arrangement	Accessories

Model Name

DHS	Air Circuit Breakers Cradle

Rated Frame

10	DHS06 ~ 10A (W)
16	DHS12 ~ 16A (W)
20	DHS20B (X)
25	DHS25B (X)
32	DHS32B (X)

※ Marking upon Shipping of Cradle
- DHS06/08/10A (W) > DHS06 ~ 16A (W)
- DHS12/16A (W) > DHS12 ~ 16A (W)
- DHS20B (X) > DHS20B (X)
- DHS25B (X) > DHS25B (X)
- DHS32B (X) > DHS32B (X)

Frame Category & Neutral Pole

A	630 ~ 1,600 A 3/4P Standard RSTN Reverse Phase NRST
B	2,000 ~ 3,200 A 3/4P Standard RSTN Reverse Phase NRST

No. of Poles

3	3 Pole
4	4 Pole

Control Terminal Connection

A	Auto Connection
J	Manual Connection

Terminal Bus Bar Arrangement

H	Horizontal Type
V	Vertical Type
T	Upper Side : Horizontal/ Lower Side : Vertical
L	Upper Side : Vertical/ Lower Side : Horizontal
P [1)]	Front Type and Mounting Type Selected by Customer

Accessories

AE	Safety Shutter

※ AE : Safety shutter lock is supplied with safety shutter.

※ 1) P type of fixed terminal bus bar arrangement should be ordered per terminal and mounted personally. (Refer to the additional components). Applicable frames are A06 ~ 16, B06 ~ 32.

Installation and Environment

Internal Resistance and Power Consumption

Model Name	Rated Current (A)	Fixed Type		Draw-Out Type	
		Internal Resistance (μΩ)	Power Consumption (W/3Phase)	Internal Resistance (μΩ)	Power Consumption (W/3Phase)
A Frame HGS/HGN 06 ~ 16	630	20	24	40	48
	800	20	38	40	77
	1,000	20	60	40	120
	1,250	20	94	40	188
	1,600	20	154	40	307
A Frame HGN 20	630	15	18	30	36
	800	15	29	30	58
	1,000	15	45	30	90
	1,250	15	70	30	141
	1,600	15	115	30	230
	2,000	13	156	27	324

Model Name	Rated Current (A)	Fixed Type		Draw-Out Type	
		Internal Resistance (μΩ)	Power Consumption (W/3Phase)	Internal Resistance (μΩ)	Power Consumption (W/3Phase)
B Frame HGS/HGN 20 ~ 32	2,000	10	120	20	240
	2,500	10	188	20	375
	3,200	10	307	20	614
B Frame HGN 40	2,000	10	120	20	240
	2,500	10	188	20	375
	3,200	10	307	20	614
	4,000	8	384	11	528
C Frame HGN 40 ~ 50	4,000	8	384	11	528
	5,000	8	600	11	825
D Frame HGN 40 ~ 63	4,000	6	288	9	432
	5,000	6	450	9	675
	6,300	5	595	7	833

※ The abovementioned power consumption is the total power consumption of the circuit breaker based on 50/60 Hz, 3/4 pole.
The inner resistance value is the resistance value per pole.
Power Factor = 1.0

Tightening Torque

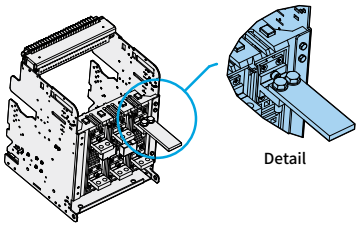

Main Circuit
Tightening Torque
M10 : 270 ± 32 kgf-cm
M12 : 480 ± 57 kgf-cm

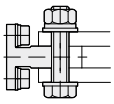

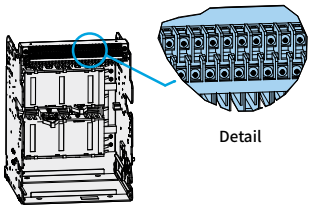

Control Circuit
Tightening Torque
M3.5 : 8.8 ± 1.1 kgf-cm

Insulation Voltage

When designing the switchboard, maintain the insulation distance in accordance with the table below.

Insulation Distance from ARC

Unit : mm

Item	A	B
Fixed Type	150	50
Draw-Out Type without Arc Shield	150	50
Draw-Out Type with Arc Shield	0	50

Minimum Insulation Distance at Charging Side

Insulating Voltage	Minimum Insulation Distance(mm)
Below 600 V	8
Above 600 V, below 1,000 V	14

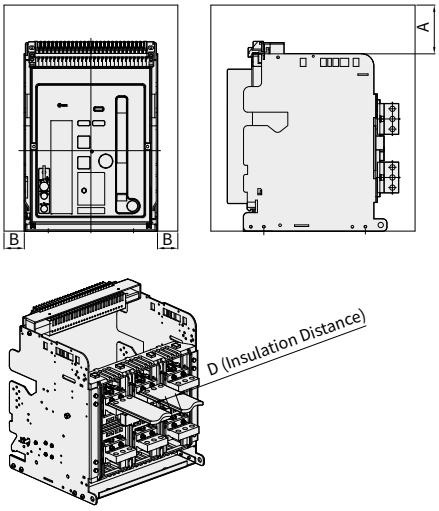

Installation and Environment

Calibration of Rating Current

Calibration of Rating Current Following Ambient Temperature and Motion Specification

Model Name	Rating Current	ACB Terminal	Applicable Motion Standard	Horizontal Type					Vertical Type				
				40 °C	45 °C	50 °C	55 °C	60 °C	40 °C	45 °C	50 °C	55 °C	60 °C
A Frame HGS/HGN 06 ~ 16	200 A	15 t×50×1 ea	5 t×50×1 ea	200 A	200 A	200 A	200 A	200 A	200 A	200 A	200 A	200 A	200 A
	400 A			400 A	400 A	400 A	400 A	400 A	400 A	400 A	400 A	400 A	400 A
	630 A		5 t×50×2 ea 10 t×60×1 ea	630 A	630 A	630 A	630 A	630 A	630 A	630 A	630 A	630 A	630 A
	800 A		6 t×50×2 ea 10 t×60×1 ea	800 A	800 A	800 A	800 A	800 A	800 A	800 A	800 A	800 A	800 A
	1,000 A		8 t×50×2 ea	1,000 A	1,000 A	1,000 A	1,000 A	1,000 A	1,000 A	1,000 A	1,000 A	1,000 A	1,000 A
	1,250 A		6 t×75×2 ea	-	-	-	-	-	1,250 A	1,250 A	1,250 A	1,250 A	1,250 A
			8 t×60×2 ea 10 t×50×2 ea	1,250 A	1,250 A	1,250 A	1,250 A	1,250 A					
	1,600 A		6 t×75×3 ea	-	-	-	-	-	1,600 A	1,600 A	1,580 A	1,550 A	1,500 A
			10 t×60×2 ea 8 t×60×3 ea	1,600 A	1,600 A	1,520 A	1,480 A	1,420 A					
A Frame HGN20	2,000 A	15 t×75×1 ea	8 t×75×3 ea 10 t×100×2 ea	-	-	-	-	-	2,000 A	2,000 A	1,940 A	1,860 A	1,780 A
B Frame HGS/HGN 06 ~ 25	630 A	20 t×75×1 ea	5 t×50×2 ea 10 t×60×1 ea	630 A	630 A	630 A	630 A	630 A	630 A	630 A	630 A	630 A	630 A
	800 A		6 t×50×2 ea 10 t×60×1 ea	800 A	800 A	800 A	800 A	800 A	800 A	800 A	800 A	800 A	800 A
	1,000 A		8 t×50×2 ea	1,000 A	1,000 A	1,000 A	1,000 A	1,000 A	1,000 A	1,000 A	1,000 A	1,000 A	1,000 A
	1,250 A		6 t×75×2 ea	-	-	-	-	-	1,250 A	1,250 A	1,250 A	1,250 A	1,250 A
			8 t×60×2 ea 10 t×50×2 ea	1,250 A	1,250 A	1,250 A	1,250 A	1,250 A					
	1,600 A		6 t×75×3 ea	-	-	-	-	-	1,600 A	1,600 A	1,600 A	1,600 A	1,600 A
			10 t×60×2 ea 8 t×60×3 ea	1,600 A	1,600 A	1,600 A	1,600 A	1,600 A					
	2,000 A		8 t×75×3 ea	2,000 A	2,000 A	2,000 A	2,000 A	2,000 A	2,000 A	2,000 A	2,000 A	2,000 A	2,000 A
			10 t×100×2 ea	-	-	-	-	-					
	2,500 A		10 t×75×3 ea 8 t×75×4 ea	2,500 A	2,500 A	2,500 A	2,400 A	2,300 A	2,500 A	2,500 A	2,500 A	2,500 A	2,500 A
B Frame HGN32	3,200 A	20 t×90×1 ea	10 t×100×3 ea	-	-	-	-	-	3,200 A	3,200 A	3,120 A	3,050 A	2,950 A
			10 t×75×4 ea	3,200 A	3,200 A	3,100 A	3,000 A	2,900 A					
B Frame HGN40	4,000 A Horizontal	15 t×100×2 ea	10 t×100×4 ea 10 t×125×3 ea	4,000 A	4,000 A	3,900 A	3,800 A	3,640 A	-	-	-	-	-
	4,000 A Vertical	15 t×125×2 ea	10 t×100×4 ea 10 t×125×3 ea	-	-	-	-	-	4,000 A	4,000 A	3,950 A	3,800 A	3,680 A
C Frame HGN32 ~ 50	3,200 A	20 t×125×2 ea	10 t×100×3 ea	3,200 A	3,200 A	3,100 A	3,000 A	2,900 A	3,200 A	3,200 A	3,100 A	3,000 A	2,900 A
	4,000 A		10 t×100×4 ea	4,000 A	4,000 A	3,920 A	3,860 A	3,800 A	4,000 A	4,000 A	3,960 A	3,900 A	3,880 A
	5,000 A		10 t×125×4 ea	5,000 A	5,000 A	4,900 A	4,800 A	4,700 A	5,000 A	5,000 A	4,950 A	4,900 A	4,850 A
D Frame HGN40 ~ 63	4,000 A	20 t×125×2 ea	10 t×100×4 ea	4,000 A	4,000 A	4,000 A	4,000 A	4,000 A	4,000 A	4,000 A	4,000 A	4,000 A	4,000 A
	5,000 A		10 t×125×4 ea	5,000 A	5,000 A	4,900 A	4,820 A	4,750 A	5,000 A	5,000 A	4,950 A	4,870 A	4,850 A
	6,300 A		10 t×150×4 ea	6,300 A	6,300 A	6,170 A	6,040 A	5,900 A	6,300 A	6,300 A	6,220 A	6,160 A	6,100 A

※ The ambient temperature is based on the external temperature of the circuit breaker and the motion that can be applicable to the circuit breaker is applied.
The motion is based on copper material with no separate painting.
The maximum allowable temperature of the motion is below 100 °C.

Calibration of Rating Current Following Altitude

ACB is designed to be used at altitudes below 2,000 m.
When used at above 2,000 m, change the ratings depending on the surrounding environment condition for use.

Item \ Altitude	2,000 m	3,000 m	4,000 m	5,000 m
Withstand Voltage (V)	3,500	3,150	2,500	2,100
Average Insulating Voltage (V)	1,000	900	700	600
Max. Operation Voltage (V)	690	590	520	460
Current Calibration Coefficient	1×In	0.99×In	0.96×In	0.94×In

Derating Table (HGN)

Switchboard Composition Connection Type			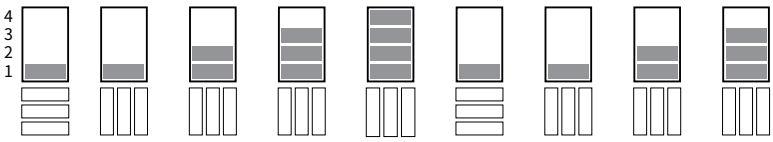								
Model Name			HGN 06 ~ 08					HGN 10			
Rated Current [2]			~ 800 A					1,000 A			
Busbar Dimensions (mm)			2 ea×50×6					2 ea×50×8			
Ventilated Switchboard Board (IP31) [3]	Ta [1] = 30 ~ 40 °C	4					800↓				
		3				800↓	800↓				1,000
		2			800↓	800↓	800↓			1,000	1,000
		1	800↓	800↓	800↓	800↓	800↓	1,000	1,000	1,000	1,000
	Ta = 40 ~ 50 °C	4					800↓				
		3				800↓	800↓				1,000
		2			800↓	800↓	800↓			1,000	1,000
		1	800↓	800↓	800↓	800↓	800↓	1,000	1,000	1,000	1,000
	Ta = 50 ~ 60 °C	4					800↓				
		3				800↓	800↓				1,000
		2			800↓	800↓	800↓			1,000	1,000
		1	800↓	800↓	800↓	800↓	800↓	1,000	1,000	1,000	1,000
Non-Ventilated Switchboard (IP41/54) [4]	Ta [1] = 30 ~ 40 °C	4					800↓				
		3				800↓	800↓				1,000
		2			800↓	800↓	800↓			1,000	1,000
		1	800↓	800↓	800↓	800↓	800↓	1,000	1,000	1,000	1,000
	Ta = 40 ~ 50 °C	4					800↓				
		3				800↓	800↓				1,000
		2			800↓	800↓	800↓			1,000	1,000
		1	800↓	800↓	800↓	800↓	800↓	1,000	1,000	1,000	1,000
	Ta = 50 ~ 60 °C	4					800↓				
		3				800↓	800↓				1,000
		2			800↓	800↓	800↓			1,000	1,000
		1	800↓	800↓	800↓	800↓	800↓	1,000	1,000	1,000	1000
Panel Dimensions (mm) : W×H×D			800×2,300×900								
Area of Outlet Vents (IP31)			350 cm^2								
Area of Inlet Vents (IP31)			350 cm^2								

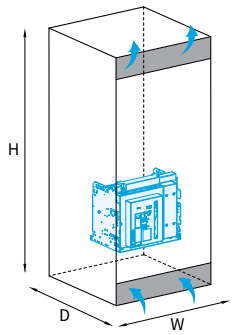

Area of Intake Ventilator : 350 cm^2
Area of Exhaust Ventilator : 350 cm^2

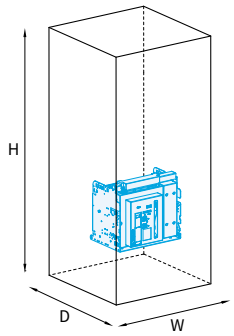

※ 1) The ambient temperature, Ta refers to the external temperature of the panel (IEC 60439-1).
2) The rated current satisfies the temperature condition in accordance with the temperature test regulation of IEC 60947-1, 2. When installed within the panel, the derating of additional current and recommended motion specification must be used.
3) The ventilation structure has to been designed to reduce the temperature of the product installed in the panel.
4) Forced ventilation device must be added in order to reduce the temperature inside the panel in an enclosed structure.
The load rate under the derating table above must be used below 70 % of the rated current. In case it is smaller than the designated bus bar size, it causes an increase in temperature due to the reduced area of the bus bar. In order to protect the load, the current load rate must be reduced to a safe range.

Installation and Environment

Derating Table (HGN)

Switchboard Composition Connection Type			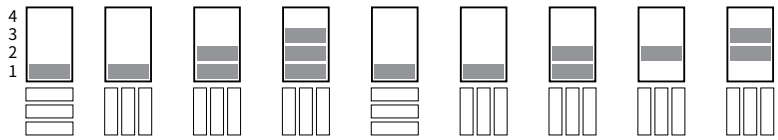								
Model Name			HGN 12A				HGN 16A			HGN 20A	
Rated Current [2]			1,250 A				1,600 A			2,000 A	
Busbar Dimensions (mm)			2 ea×75×8				3 ea×75×8			2 ea×100×10	
Ventilated Switchboard (IP31) [3]	Ta [1] = 30 ~ 40 °C	4									
		3				1,250					2,000
		2			1,250	1,250			1,600	2,000	2,000
		1	1,250	1,250	1,250	1,250	1,600	1,600	1,600		
	Ta = 40 ~ 50 °C	4									
		3				1,250					1,900
		2			1,250	1,250			1,600	2,000	2,000
		1	1,250	1,250	1,250	1,250	1,600	1,600	1,600		
	Ta = 50 ~ 60 °C	4									
		3				1,250					1,800
		2			1,250	1,250			1,470	1,900	1,900
		1	1,250	1,250	1,250	1,250	1,520	1,600	1,600		
Non-Ventilated Switchboard (IP41/54) [4]	Ta [1] = 30 ~ 40 °C	4									
		3				1,250					1,750
		2			1,250	1,250			1,600	1,850	1,850
		1	1,250	1,250	1,250	1,250	1,600	1,600	1,600		
	Ta = 40 ~ 50 °C	4									
		3				1,250					1,650
		2			1,250	1,250			1,500	1,750	1,750
		1	1,250	1,250	1,250	1,250	1,500	1,600	1,600		
	Ta = 50 ~ 60 °C	4									
		3				1,250					1,550
		2			1,250	1,250			1,400	1,650	1,650
		1	1,250	1,250	1,250	1,250	1,400	1,520	1,520		
Panel Dimensions (mm) : W×H×D			800×2,300×900								
Area of Outlet Vents (IP31)			350 cm^2								
Area of Inlet Vents (IP31)			350 cm^2								

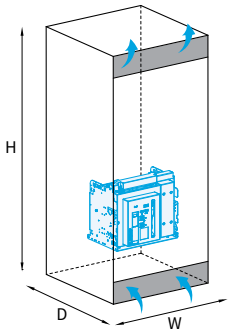

Area of Intake Ventilator : 350 cm^2
Area of Exhaust Ventilator : 350 cm^2

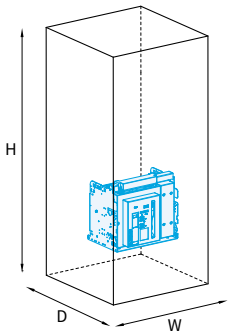

※ 1) The ambient temperature, Ta refers to the external temperature of the panel (IEC 60439-1).
2) The rated current satisfies the temperature condition in accordance with the temperature test regulation of IEC 60947-1, 2. When installed within the panel, the derating of additional current and recommended motion specification must be used.
3) The ventilation structure has to been designed to reduce the temperature of the product installed in the panel.
4) Forced ventilation device must be added in order to reduce the temperature inside the panel in an enclosed structure.
The load rate under the derating table above must be used below 70 % of the rated current. In case it is smaller than the designated bus bar size, it causes an increase in temperature due to the reduced area of the bus bar. In order to protect the load, the current load rate must be reduced to a safe range.

Switchboard Composition Connection Type			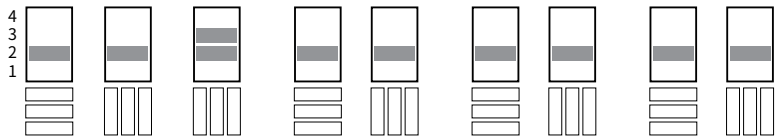								
Model Name			HGN 06 ~ 20B			HGN 25B		HGN 32B		HGN 40B	
Rated Current [2]			2,000 A			2,500 A		3,200 A		4,000 A	
Busbar Dimensions (mm)			2 ea×100×10			3 ea×100×10		3 ea×125×10		4 ea×125×10	
Ventilated Switchboard (IP31) [3]		4									
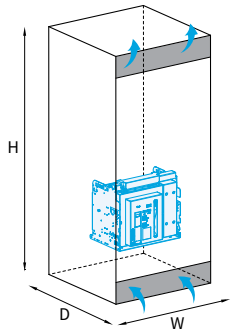	Ta [1] = 30 ~ 40 °C	3			2,000↓						
		2	2,000↓	2,000↓	2,000↓	2,375	2,500	3,040	3,200	3,320	3,700
		1									
		4									
	Ta = 40 ~ 50 °C	3			2,000↓						
		2	2,000↓	2,000↓	2,000↓	2,250	2,380	2,880	3,100	3,160	3,500
		1									
		4									
	Ta = 50 ~ 60 °C	3			2,000↓						
Area of Intake Ventilator : 350 cm^2 Area of Exhaust Ventilator : 350 cm^2		2	2,000↓	2,000↓	2,000↓	2,100	2,250	2,690	2,900	2,960	3,280
		1									
Non-Ventilated Switchboard (IP41/54) [4]		4									
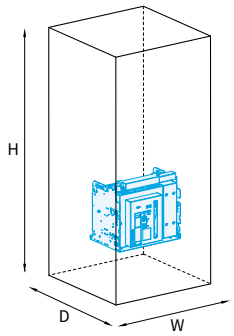	Ta [1] = 30 ~ 40 °C	3			2,000↓						
		2	2,000↓	2,000↓	2,000↓	2,125	2,275	2,650	2,850	3,040	3,320
		1									
		4									
	Ta = 40 ~ 50 °C	3			1,900↓						
		2	1,900↓	1,960↓	1,960↓	2,000	2,150	2,550	2,700	2,880	3,120
		1									
		4									
	Ta = 50 ~ 60 °C	3			1,780↓						
		2	1,800↓	1,920↓	1,920↓	1,900	2,020	2,370	2,530	2,720	2,960
		1									
Panel Dimensions (mm) : W×H×D			800×2,300×900								
Area of Outlet Vents (IP31)			350 cm^2								
Area of Inlet Vents (IP31)			350 cm^2								

Installation and Environment

Derating Table (HGN)

Switchboard Composition Connection Type			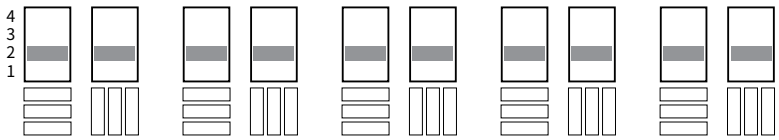									
Model Name			HGN 40C		HGN 50C		HGN 40D		HGN 50D		HGN 63D	
Rated Current [2]			4,000 A		5,000 A		4,000 A		5,000 A		6,300 A	
Busbar Dimensions (mm)			4 ea×125×10		5 ea×140×10		4 ea×125×10		5 ea×140×10		5 ea×160×10	
Ventilated Switchboard (IP31) [3]	Ta [1] = 30 ~ 40 °C	4										
		3										
		2	3,900	4,000	4,550	4,850	4,000	4,000	4,700	5,000	5,550	5,850
		1										
	Ta = 40 ~ 50 °C	4										
		3										
		2	3,850	3,900	4,350	4,650	4,000	4,000	4,450	4,850	5,380	5,670
		1										
	Ta = 50 ~ 60 °C	4										
		3										
		2	3,800	3,850	4,100	4,400	4,000	4,000	4,200	4,600	5,080	5,350
		1										
Non-Ventilated Switchboard (IP41/54) [4]	Ta [1] = 30 ~ 40 °C	4										
		3										
		2	3,800	3,900	4,200	4,500	4,000	4,000	4,350	4,650	5,050	5,290
		1										
	Ta = 40 ~ 50 °C	4										
		3										
		2	3,650	3,800	3,950	4,250	4,000	4,000	4,100	4,400	4,780	5,040
		1										
	Ta = 50 ~ 60 °C	4										
		3										
		2	3,550	3,650	3,750	4,050	3,840	3,950	3,850	4,150	4,490	4,730
		1										
Panel Dimensions (mm) : W×H×D			1,000×2,300×900				1,400×2,300×1,500					
Area of Outlet Vents (IP31)			500 cm^2				500 cm^2					
Area of Inlet Vents (IP31)			500 cm^2				500 cm^2					

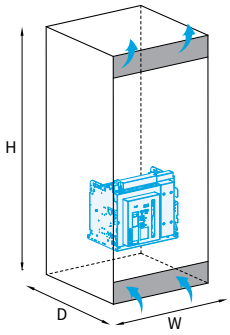

Area of Intake Ventilator : 350 cm^2
Area of Exhaust Ventilator : 350 cm^2

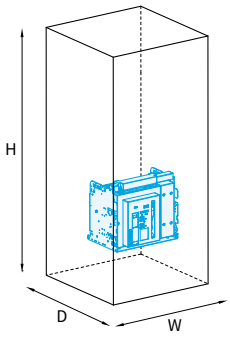

※ 1) The ambient temperature, Ta refers to the external temperature of the panel (IEC 60439-1).
2) The rated current satisfies the temperature condition in accordance with the temperature test regulation of IEC 60947-1, 2. When installed within the panel, the derating of additional current and recommended motion specification must be used.
3) The ventilation structure has to been designed to reduce the temperature of the product installed in the panel.
4) Forced ventilation device must be added in order to reduce the temperature inside the panel in an enclosed structure.
The load rate under the derating table above must be used below 70% of the rated current. In case it is smaller than the designated bus bar size, it causes an increase in temperature due to the reduced area of the bus bar. In order to protect the load, the current load rate must be reduced to a safe range.

Derating Table (HGS)

Switchboard Composition Connection Type			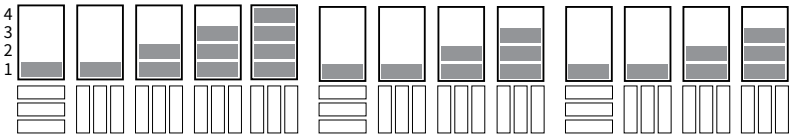												
Model Name			HGS 06 ~ 08A					HGS 10A				HGS 12A			
Rated Current [2]			~ 800 A					1,000 A				1,250 A			
Busbar Dimensions (mm)			2 ea×50×6					2 ea×50×8				2 ea×75×8			
Ventilated Switchboard (IP31) [3]	Ta [1] = 30 ~ 40 °C	4					800↓								
		3				800↓	800↓				1,000				1,250
		2			800↓	800↓	800↓			1,000	1,000			1,250	1,250
		1	800↓	800↓	800↓	800↓	800↓	1,000	1,000	1,000	1,000	1,250	1,250	1,250	1,250
	Ta = 40 ~ 50 °C	4					800↓								
		3				800↓	800↓				1,000				1,250
		2			800↓	800↓	800↓			1,000	1,000			1,250	1,250
		1	800↓	800↓	800↓	800↓	800↓	1,000	1,000	1,000	1,000	1,250	1,250	1,250	1,250
	Ta = 50 ~ 60 °C	4					800↓								
		3				800↓	800↓				1,000				1,050
		2			800↓	800↓	800↓			1,000	1,000			1,200	1,150
		1	800↓	800↓	800↓	800↓	800↓	1,000	1,000	1,000	1,000	1,250	1,250	1,250	1,250
Non-Ventilated Switchboard (IP41/54) [4]	Ta [1] = 30 ~ 40 °C	4					800↓								
		3				800↓	800↓				1,000				1,050
		2			800↓	800↓	800↓			1,000	1,000			1,200	1,150
		1	800↓	800↓	800↓	800↓	800↓	1,000	1,000	1,000	1,000	1,250	1,250	1,250	1,250
	Ta = 40 ~ 50 °C	4					800↓								
		3				800↓	800↓				900				1,000
		2			800↓	800↓	800↓			975	950			1,100	1,050
		1	800↓	800↓	800↓	800↓	800↓	1,000	1,000	1,000	1,000	1,250	1,250	1,150	1,150
	Ta = 50 ~ 60 °C	4					800↓								
		3				800↓	800↓				850				975
		2			800↓	800↓	800↓			950	900			1,050	1,000
		1	800↓	800↓	800↓	800↓	800↓	1,000	1,000	975	950	1,250	1,250	1,150	1,050
Panel Dimensions (mm) : W×H×D			800×2,300×900												
Area of Outlet Vents (IP31)			350 cm^2												
Area of Inlet Vents (IP31)			350 cm^2												

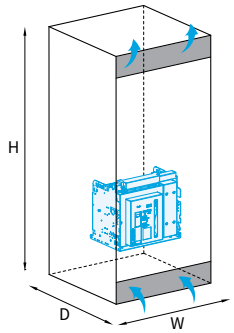

Area of Intake Ventilator : 350 cm^2
Area of Exhaust Ventilator : 350 cm^2

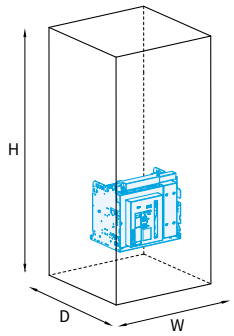

Installation and Environment

Derating Table (HGS)

Switchboard Composition Connection Type			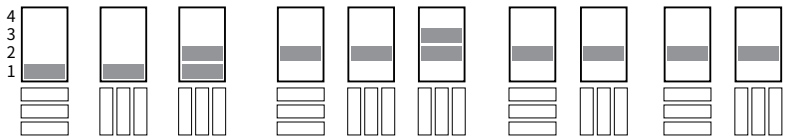									
Model Name			HGS 16A			HGS 20B			HGS 25B		HGS 32B	
Rated Current [2]			1,600 A			2,000 A			2,500 A		3,200 A	
Busbar Dimensions (mm)			3 ea×75×8			2 ea×100×10			3 ea×100×10		3 ea×25×10	
Ventilated Switchboard (IP31) [3]	Ta [1] = 30 ~ 40 °C	4										
		3						2,000				
		2			1,600	2,000	2,000	2,000	2,375	2,500	2,880	3,100
		1	1,600	1,600	1,600							
	Ta = 40 ~ 50 °C	4										
		3						1,900				
		2			1,520	1,900	2,000	2,000	2,250	2,380	2,690	2,900
		1	1,600	1,600	1,600							
	Ta = 50 ~ 60 °C	4										
		3						1,800				
		2			1,450	1,800	1,950	1,900	2,100	2,250	2,500	2,700
		1	1,520	1,600	1,520							
Non-Ventilated Switchboard (IP41/54) [4]	Ta [1] = 30 ~ 40 °C	4										
		3						1,750				
		2			1,520	1,750	1,850	1,850	2,125	2,275	2,550	2,700
		1	1,600	1,600	1,600							
	Ta = 40 ~ 50 °C	4										
		3						1,650				
		2			1,450	1,650	1,750	1,750	2,000	2,150	2,370	2,530
		1	1,520	1,600	1,520							
	Ta = 50 ~ 60 °C	4										
		3						1,550				
		2			1,370	1,550	1,650	1,650	1,900	2,020	2,200	2,370
		1	1,370	1,450	1,450							
Panel Dimensions (mm) : W×H×D			800×2,300×900			800×2,300×900						
Area of Outlet Vents (IP31)			350 cm^2			350 cm^2						
Area of Inlet Vents (IP31)			350 cm^2			350 cm^2						

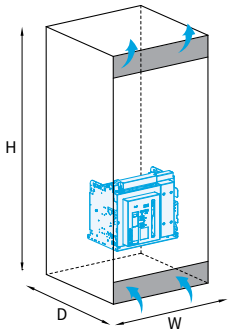

Area of Intake Ventilator : 350 cm^2
Area of Exhaust Ventilator : 350 cm^2

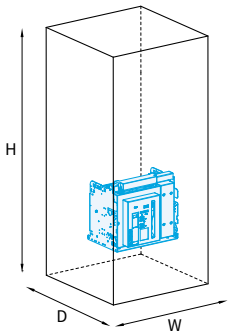

※ 1) The ambient temperature, Ta refers to the external temperature of the panel (IEC 60439-1).
2) The rated current satisfies the temperature condition in accordance with the temperature test regulation of IEC 60947-1, 2. When installed within the panel, the derating of additional current and recommended motion specification must be used.
3) The ventilation structure has to been designed to reduce the temperature of the product installed in the panel.
4) Forced ventilation device must be added in order to reduce the temperature inside the panel in an enclosed structure.
The load rate under the derating table above must be used below 70 % of the rated current. In case it is smaller than the designated bus bar size, it causes an increase in temperature due to the reduced area of the bus bar. In order to protect the load, the current load rate must be reduced to a safe range.

Standard Operation Conditions

The following regulated value has been set in accordance with IEC 62271-100 (IEC 62271-1).

| Ambient Temperature | -5 ~ +40 °C
(Daily average temperature of below 35 °C)
| Altitude | Below 2,000 m above sea level
| Relative Humidity | Below 85 % (Below daily average of 85 %)

The surrounding environment may affect the insulation performance and durability of the circuit break so the operation conditions must be checked clearly before application.

In case of operating in high ambient temperature exceeding 40 °C, use according to the derating calibrated depending on the ambient temperature indicated in the catalogue.

In case of operating in places with high humidity and frequent rain, the insulation or electrical performance may drop.

In case of storing and using in places with a lot of dust and humidity, the use of a dust cover or dehumidifier is recommended. Excessive impact and vibration may cause damage in the operation mechanism.

When storing circuit breaker without electric circuit : -25 °C ~ 85 °C
When storing circuit breaker with electric circuit : -15 °C ~ 70 °C
After storing in low temperature, store for more than 8 hours in room temperature then store in an open location for the type with charging motor.

In case there is a lot of corrosive gas, it must be stored in an enclosed protective structure to minimize damage.

In case of highland with high altitude, the insulation performance drops so please apply the highest rating product after checking the insulation performance calibration coefficient.

Special Operating Conditions

The HG-Series air circuit breaker has been designed/manufactured to operate in a standard operating environment designated by the IEC standard and in case of operating the circuit breaker in the following special environment, contact our company.

- In case the altitude above sea level and the ambient temperature exceeds the standard operating environment
- In case of a region with a lot of sea wind or salinity
- In case of a region with snow and freezing
- In case of a region of frequent shock and vibration
- In case the relative humidity exceeds the standard operating environment
- In case of a region with a lot of humidity and frequent rainfall
- In case of a region with a lot of dust, vapor, corrosive and combustible gas, wet steam
- In other special environment that exceeds the standard environment

※ Special operating environment and condition may cause damage in the product (Increase in resistance at main circuit, rust, change in coating).

Installation and Environment

Standard Operating Conditions

Load Rate (I/In)

- ACB cannot be used in outdoor panel in principle. In case of inevitable installation, the ambient temperature must be below 40 °C and the load rate must be below 50 % of the rated current. In case it is not complied with, it may cause heating and burning in the ACB.
- As for the total harmonic distortion (THD) rate, it must be managed below 5 % in the distribution system phase. In case it is not complied with, it may cause heating in the product.

Load Rate	Hours of Use	Effect	Installation
I/In ≤ 80 %	24/24 Hours	-	Normal Condition (Recommended)
80 < I/In ≤ 90 %	24/24 Hours	-	Periodic Inspection
I/In = 100 %	24/24 Hours	Change in Plastic Insulation Material Color	Additional Exhaust

Altitude

- Below 2,000 m

Item	Altitude		
	2,000 m (6,600 ft)	2,600 m (8,500 ft)	3,900 m (13,000 ft)
Isolation Voltage (V)	1,000	950	800
Operating Voltage (V)	690	655.5	552
Allowed Current (V)	In	0.99×In	0.96×In

Protection Degree Provided by Enclosures (IP Code)

- Standard : IP30 (When the ACB front cover part of the switchboard door is cut out)
- With Dust Cover : IP52

Classification of Protection Degree Provided by Enclosures (IP code) IEC 60529

Indication : I P □ □

- Second Characteristic Numeral : Level of preventing liquid from permeating into the external box (0 ~ 8)
- First Characteristic Numeral : Level of preventing particulate materials from permeating into the external box (0 ~ 6)

※ In the event indicating the characteristic number is not required, mark the said area with 'X'.

Classification Table Following the Degree

Numeral	Protection Degree	
	First Characteristic Numeral (Particulate)	Second Characteristic Numeral (Liquid)
0	No protection (Open)	No protection (Open)
1	Protected against external objects with a diameter of 50 mm and above	Protected against vertical fall
2	Protected against external objects with a diameter of 12.5 mm and above	Protected against falling with a gradient of 15 °
3	Protected against external objects with a diameter of 2.5 mm and above	Protected against falling with a gradient of 60 °
4	Protected against external objects with a diameter of 1.0 mm and above	Protected against spraying water from up, down, left, right (Splash proof)
5	Protected against deposition risk of dust and others	Protected against spraying water from up, down, left, right (Hose proof)
6	Complete protection without deposition of dust and others	Protected against heavy rainfall and tsunami (Deckwater proof)
7	-	Protected against submersion under certain pressure and certain time (Immersible)
8	-	Protected against complete submersion (Submersible)

Product Installation Condition

- In order to prevent burning of products caused by electrical fault and to enhance structural safety of the panel when installing the product in areas with concerns of vibration, mount the fixing block and install the terminal supporting position like the figure.
- In particular, when executing short-time/short-circuit panel testing, it must be installed for structural safety.
- For the support dimension of the product, refer to the drawing.
- In the event of switchboard (Panel) development test (Short-time, short-circuit), the bus bar inside the panel must be supported firmly according to the following conditions.

Unit : mm

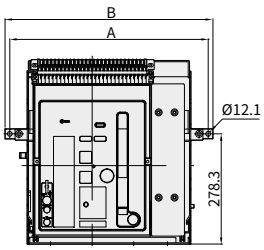

Front

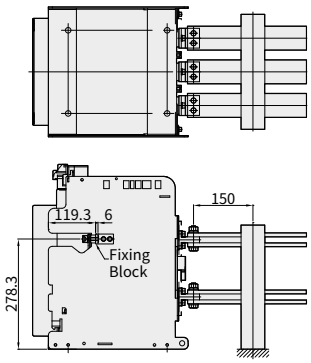

Horizontal Type

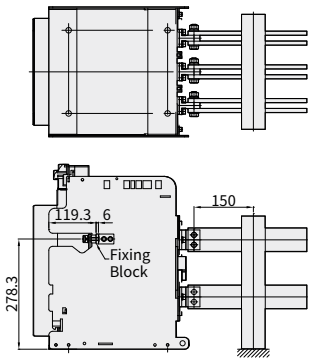

Vertical Type

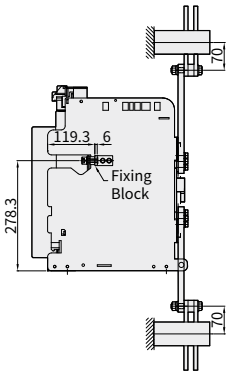

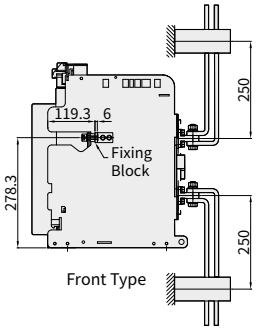

Front Type

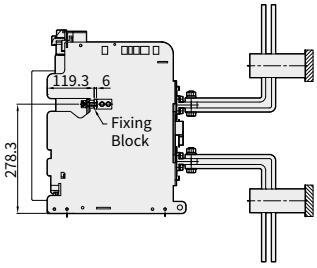

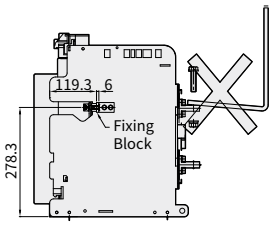

Wrong Installation

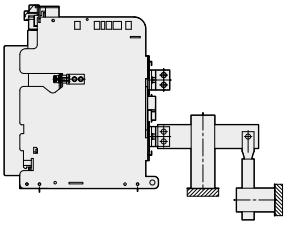

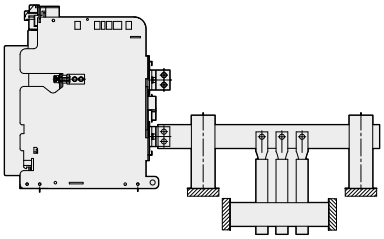

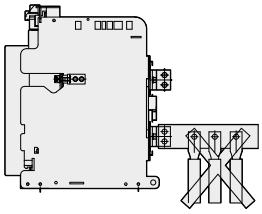

Model Name	A	B
HGS 06 ~ 16A 3P, HGN 06 ~ 20A 3P	416	440
HGS 06 ~ 16A 4P, HGN 06 ~ 20A 4P	501	525
HGS 20 ~ 32A 3P, HGN 20 ~ 40A 3P	487	511
HGS 20 ~ 32A 4P, HGN 20 ~ 40A 4P	602	626
HGN 40 ~ 50C 3P	712	736
HGN 40 ~ 50C 4P	906	982
HGN 40 ~ 63C 3P	854	878
HGN 40 ~ 63C 4P	1,084	1,108

Maintenance Inspection List

Regular Inspection and Part Replacement

Regular Inspection

Inspection Form	Inspection Item			Inspection Period
	Main Review Item	Details and Countermeasures		
General Regular Inspection	Foreign Substance	Visual examination must be executed and there must be no foreign substance inside. Blow away the foreign substance using compressed air.		Every 6 months
	Gap	Execute visual examination and there must be no cracks or gaps.		Replace, repair
	Operation	Circuit breaker must be closed manually to inspect the operation area during normal status.		Once a year
	Greasing	Apply an adequate amount of grease on each pin, axle and bearing. Excessive greasing may cause dust and stain from building up. Electrical grease : HITALWBE 28G Lubiricant grease : Kamro Chemical/CHEMAX HHI 5000#1.		Every 6 months
	Spring Type	The status of the spring must be checked to inspect the damaged area.		Replace, repair
	Screw/Bolt Type	Tighten loose areas using screw or bolt.		Every 6 months
	Stain on the Fastening Bolt Area	There must be no dust or stain at the fastening area. Wipe the area well using clean cloth dipped in alcohol.		All the time
Mechanical Durability Warranty Lifespan Inspection	Below 2,500 AF	Total operation frequency : 3,000 times	Non-current 2,500 time, current 500 time	Paid inspection is required (Precision inspection) Inspection period : At least 6 months after exceeding the opening/closing frequency Precision inspection once a year is recommended Contact our company to determine is replacement is required
		Open/closing frequency : 500 times	Open/close within the range of rated current	
		Open/closing frequency : 25 times	Open/close in over-load (Around 6 times the rated current) area	
		Immediately upon breaking	Prevent short-circuit/earth fault	
	Above 3,200 AF	Open/close frequency : 2,000 times	Non-current 1,500 time, current 500 time	
		Open/close cycle: 500 times	Open/close within the range of rated current	
		Open/close cycle : 25 times	Open/close in over-load (Around 6 times the rated current) area	
		Immediately upon breaking	Prevent short-circuit/earth fault	
Arc Chamber (Grid)	Contact with Foreign Substance	In case foreign substance has melted onto the grid's side plate, replace the ionized pieces inside the arc chamber and others.		Replace, contact our company
Arc Contact	Contact Tip Surface	Remove foreign substance, dust and oil.		Visual inspection, no problem Replace, contact our company
		Melting stains on the contact tip surface is caused by open/closing arc.		
		In case the extent of melting caused by arc reduces to 1/3, replace the entire operation and fixing moving contact unit.		
		However, in case there is foreign substance on the contact, precision diagnosis is required to determine if replacement is necessary through our company's paid service.		
Main Contact	Damage of Main Contact	In case the main contact has been worn off and is rough, the surface must be managed neatly.		At all times
		However, in case there is foreign substance on the contact, precision diagnosis is required to determine if replacement is necessary through our company's paid service.		

⚠ Caution

1. In the event the contact or part is replaced, turn the circuit breaker off and replace after drawing out the disconnected position to isolated.
2. Execute the inspection work after checking whether the remaining heat in the conduction part has been dissipated. It may cause burns.
3. When rubbing the contact tip, ensure that the sludge does not enter the circuit breaker's mechanical device. After rubbing, wipe the contact tip neatly.

Assembly & Disassembly

Loosen the screw for arc chamber assembly. Then, remove the arc chamber. (Level the circuit breaker).
In order to assemble the arc chamber, check the square nut, place the arc chamber in the original position and tighten the fixing screw (M6).

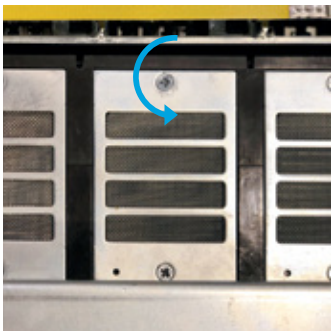

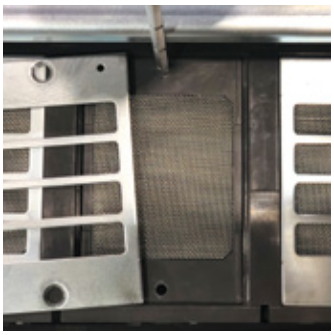

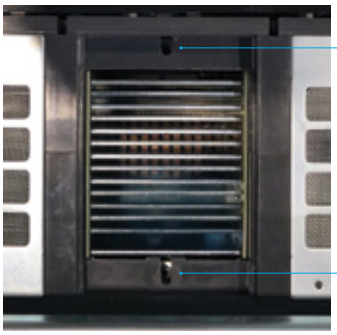

⚠ Caution

When replacing the contact or part, turn the circuit breaker off and exchange after drawing out from isolated position.
In addition, execute the inspection work after checking whether the remaining heat in the conduction part has been dissipated.
It may cause burns.

When removing the arc chamber, the square nut for bolt fastening must be removed together.
In the event of on-off operation without removing the square nut, the nut may flow into the pole due to impact.
It may cause malfunction.

When rubbing the contact tip, ensure that the sludge does not enter the circuit breaker's mechanical device.
After rubbing, wipe the contact tip neatly.

Maintenance Inspection List

Regular Inspection and Part Replacement

Operation Tool

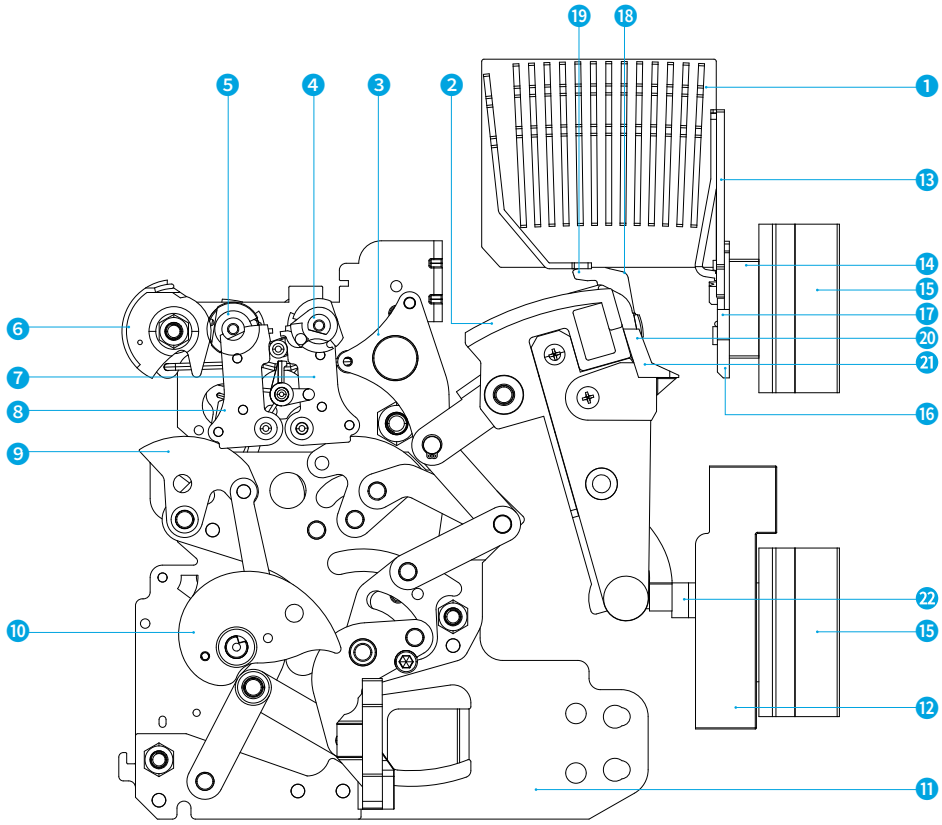

1. Arc Chamber
2. Move Contact Fix Base
3. Crossbar Unit
4. Open Lever
5. Close Lever
6. Charged/Discharged Indicator
7. Open Latch
8. Close Latch
9. CO Latch
10. Closing Cam
11. Mechanism Frame
12. Current Transformer
13. Arc Runner
14. Up Terminal
15. In/Out Terminal Body
16. Main Fix Contact Tip
17. Arc Fix Contact Tip
18. Arc Move Contact Tip
19. Arc Move Contact
20. Main Move Contact
21. Main Move Contact Tip
22. Low Terminal

Current Status of Acquired Standards

Approvals & Certificates

ACB

● : Acquired
◎ : In Progress (Expected)

Type of Certification	Approvals				
Type of Standard	KS	IEC	IEC	IEC	ANSI
Mark			DEKRA		
Testing Institute	KS	CE	DEKRA	Nuclear	KERI
Certification Country	Korea	Europe	Netherlands	Korea	Korea
HGS06 A Frame	●	●	●		
HGS08 A Frame	●	●	●		
HGS10 A Frame	●	●	●		
HGS12 A Frame	●	●	●		
HGS16 A Frame	●	●	●		
HGS20 B Frame	●	●	●		
HGS25 B Frame	●	●	●		
HGS32 B Frame	●	●	●		
HGN06 A Frame	●	●	●		●
HGN08 A Frame	●	●	●		●
HGN10 A Frame	●	●	●		●
HGN12 A Frame	●	●	●		●
HGN16 A Frame	●	●	●	◎	●
HGN20 A Frame	●	●	●		●
HGN06 B Frame	●	●	●		●
HGN08 B Frame	●	●	●		●
HGN10 B Frame	●	●	●		●
HGN12 B Frame	●	●	●		●
HGN16 B Frame	●	●	●		●
HGN20 B Frame	●	●	●	◎	●
HGN25 B Frame	●	●	●		●
HGN32 B Frame	●	●	●	◎	●
HGN40 B Frame	●	●	●		●
HGN32 C Frame	●	●	●		●
HGN40 C Frame	●	●	●		●
HGN50 C Frame	●	●	●		●
HGN40 D Frame		●	●		
HGN50 D Frame		●	●		
HGN63 D Frame		●	●		

Current Status of Acquired Standards

Approvals & Certificates

ACB

● : Acquired
◎ : In Progress (Expected)

Type of Certification	Vessel								
Type of Standard	Korea	U.K	U.S.A	France	Japan	Germany	Germany	Italy	Russia
Mark	KR KOREAN REGISTER	Lloyd's Register	ABS	BUREAU VERITAS	ClassNK	GL OPERATING 24/7	DNV	RINA	RMRS
Testing Institute	KR	LR	ABS	BV	NK	GL	DNV	RINA	RMRS
Certification Country	Korea	U.K.	USA	France	Japan	Germany	Germany	Italy	Russia
HGS06 A Frame	●	●	●	●	●	●	●	●	●
HGS08 A Frame	●	●	●	●	●	●	●	●	●
HGS10 A Frame	●	●	●	●	●	●	●	●	●
HGS12 A Frame	●	●	●	●	●	●	●	●	●
HGS16 A Frame	●	●	●	●	●	●	●	●	●
HGS20 B Frame	●	●	●	●	●	●	●	●	●
HGS25 B Frame	●	●	●	●	●	●	●	●	●
HGS32 B Frame	●	●	●	●	●	●	●	●	●
HGN06 A Frame	●	●	●	●	●	●	●	●	●
HGN08 A Frame	●	●	●	●	●	●	●	●	●
HGN10 A Frame	●	●	●	●	●	●	●	●	●
HGN12 A Frame	●	●	●	●	●	●	●	●	●
HGN16 A Frame	●	●	●	●	●	●	●	●	●
HGN20 A Frame	●	●	●	●	●	●	●	●	●
HGN08 B Frame	●	●	●	●	●	●	●	●	●
HGN10 B Frame	●	●	●	●	●	●	●	●	●
HGN12 B Frame	●	●	●	●	●	●	●	●	●
HGN16 B Frame	●	●	●	●	●	●	●	●	●
HGN20 B Frame	●	●	●	●	●	●	●	●	●
HGN32 B Frame	●	●	●	●	●	●	●	●	●
HGN40 B Frame	●	●	●	●	●	●	●	●	●
HGN32 C Frame	●	●	●	●	●	●	●	●	●
HGN40 C Frame	●	●	●	●	●	●	●	●	●
HGN50 C Frame	●	●	●	●	●	●	●	●	●
HGN40 D Frame	●	●	●	●	●	●	●	●	●
HGN50 D Frame	●	●	●	●	●	●	●	●	●
HGN63 D Frame	●	●	●	●	●	●	●	●	●